Table of Contents

Overseeder (S/N 166724+)

OS1548 and OS1572

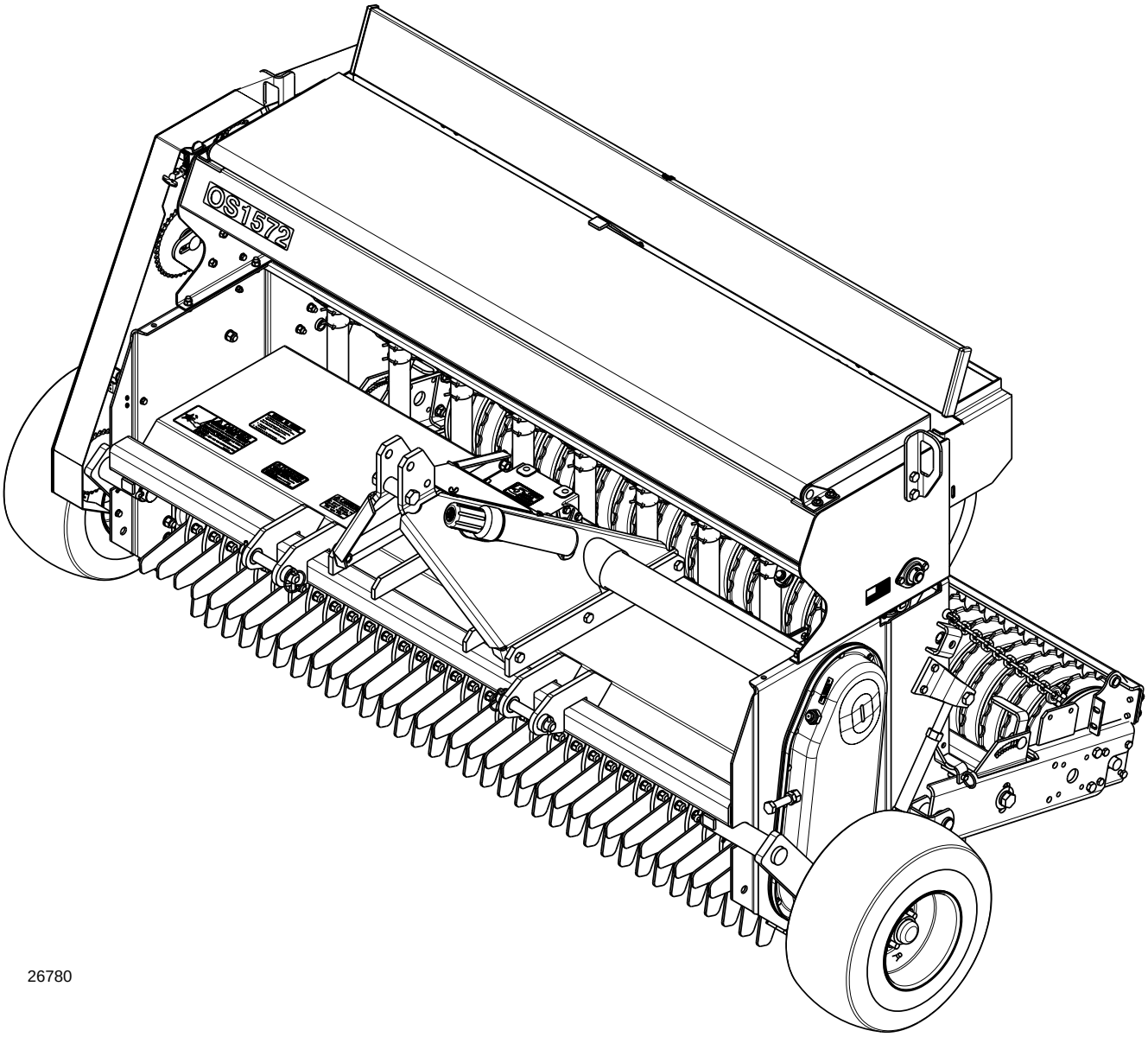

26780

308-303M
Operator's Manual

Read the Operator's manual entirely. When you see this symbol, the subsequent instructions and warnings are serious - follow without exception. Your life and the lives of others depend on it!

Cover photo may show optional equipment not supplied with standard unit.

Important Safety Information 1
Safety at All Times 1
Look For The Safety Alert Symbol 1
Safety Labels 4
Introduction 7
Application 7
Using This Manual 7
Terminology 7
Definitions 7
Owner Assistance 7
Serial Number Plate 7
Further Assistance 8
Section 1: Assembly & Set-up 9
Tractor Requirements 9
Shipping information 9
Pre-Assembly Checklist 9
Sling Brackets 9
Pre-Assembly Checklist 9
Torque Requirements 9
Quick Change Rotor 10
Rear Roller Assembly 11
Gauge Wheel Drive 11
Rear Roller Drive 11
Driveline Installation 12
Section 2: Operating Instructions 14
Operating Check List 14
Tractor Hook-Up 14
Transporting 15
Filling the Seed Box 15
How the Seeder Works 16
Parking 16
General Notes for Field Operations 16
General Operating Instructions 17
Section 3: Adjustments 18
Seeding Adjustments 18
Seed Rate Charts (English) 20
Small Seeds Attachment Seed Rate Chart 21
Seed Rate Charts (Metric) 22
Small Seeds Attachment Seed Rate Chart 23
Rotary Cutting Depth Adjustment 24
Gauge Wheel Drive 24
Rear Roller Drive 24
Rear Roller Drive With Front Roller 25
Rear Arm Length Adjustment 26
Tine Attachment (Optional) 26
Slit Seeder Attachment (Optional) 27
Feed Cup Drive System Adjustment 27
Rotor Drive Chain Adjustment 27
Small Seeds Attachment (Optional) 28
Small Seeds Seed Rate Chart (English) 30
Section 4: Maintenance & Lubrication . .31
Maintenance 31
Storage 31
Individual Knife Replacement 31
Rotor Maintenance 31
Rear Roller Maintenance 33
Rear Roller Inspection 33
Rear Roller Disassembly 33
Rear Roller Assembly 33
Driveline Slip Clutches 34
Type A Clutches 34
Type B Clutch 37
Lubrication Points 38
PTO - U-Joint 38
PTO - Profiles 38
Wheel Bearings 38
Rear Roller Bearings 39
Feed Cup Drive Sprocket 39
Feed Cup Drive Chains 39
Agitator Drive Chain 39
Gearbox 40
Driveline Chaincase 40
Drive Sprocket Hanger Bearing 40
Feed Cup Drive Sprocket 40
Section 5: Optional Equipment 41
Slit Seeder Attachment 41
Rear Tine Attachment 41
Front Roller Attachment 42
Small Seeds Attachment 43
Section 6: Specifications & Capacities . .44
Section 7: Features and Benefits 46
Section 8: Troubleshooting 47
Section 9: Appendix 48
Torque Values Chart 48
Tire Inflation Chart 48
Warranty 49

Printed in the United States of America.

These are common practices that may or may not be applicable to the products described in this manual.

Safety at All Times

Thoroughly read and understand the instructions given in this manual before operation. Refer to the "Safety Label" section, read all instructions noted on them.

Do not allow anyone to operate this equipment who has not fully read and comprehended this manual and who has not been properly trained in the safe operation of the equipment.

- ▲ Operator should be familiar with all functions of the unit.
- ▲ Operate implement from the driver's seat only.
- ▲ Make sure all guards and shields are in place and secured before operating implement.
- ▲ Do not leave tractor or implement unattended with engine running.
- ▲ Dismounting from a moving tractor could cause serious injury or death.
- ▲ Do not allow anyone to stand between the tractor and implement while backing up to the implement.
- ▲ Keep hands, feet, and clothing away from power-driven parts.
- ▲ Wear snug fitting clothing to avoid entanglement with moving parts.
- ▲ Watch out for wires, trees, etc., when raising implement. Make sure all persons are clear of working area.
- ▲ Turning tractor too tight may cause implement to ride up on wheels. This could result in injury or equipment damage.
- ▲ Do not carry passengers on implement at any time.

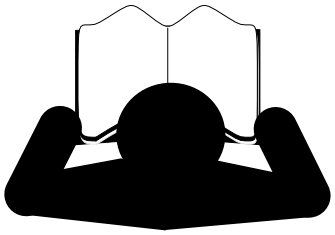

Look For The Safety Alert Symbol

The SAFETY ALERT SYMBOL indicates there is a potential hazard to personal safety involved and extra safety precaution must be taken. When you see this symbol, be alert and carefully read the message that follows it. In addition to design and configuration of equipment, hazard control and accident prevention are dependent upon the awareness, concern, prudence and proper training of personnel involved in the operation, transport, maintenance and storage of equipment.

Be Aware of Signal Words

A Signal word designates a degree or level of hazard seriousness. The signal words are:

⚠ DANGER
Indicates an imminently hazardous situation which, if not avoided, will result in death or serious injury. This signal word is limited to the most extreme situations, typically for machine components that, for functional purposes, cannot be guarded.

⚠ WARNING
Indicates a potentially hazardous situation which, if not avoided, could result in death or serious injury, and includes hazards that are exposed when guards are removed. It may also be used to alert against unsafe practices.

⚠ CAUTION
Indicates a potentially hazardous situation which, if not avoided, may result in minor or moderate injury. It may also be used to alert against unsafe practices.

For Your Protection

- ▲ Thoroughly read and understand the "Safety Label" section, read all instructions noted on them.

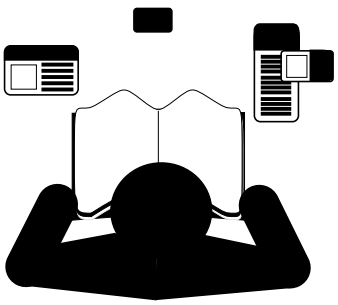

Shutdown and Storage

- ▲ Lower machine to ground, put tractor in park, turn off engine, and remove the key.
- ▲ Detach and store implements in a area where children normally do not play. Secure implement by using blocks and supports.

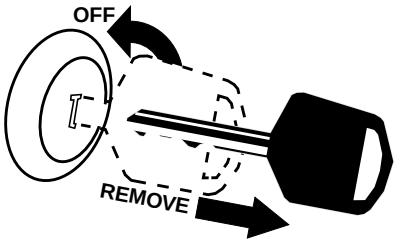

These are common practices that may or may not be applicable to the products described in this manual.

Use Safety Lights and Devices

- ▲ Slow moving tractors, self-propelled equipment, and towed implements can create a hazard when driven on public roads. They are difficult to see, especially at night.
- ▲ Flashing warning lights and turn signals are recommended whenever driving on public roads.

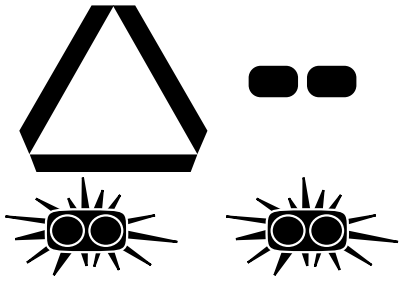

Transport Machinery Safely

- ▲ Comply with state and local laws.
- ▲ Maximum transport speed for implement is 20 mph. DO NOT EXCEED. Never travel at a speed which does not allow adequate control of steering and stopping. Some rough terrain require a slower speed.
- ▲ Sudden braking can cause a towed load to swerve and upset. Reduce speed if towed load is not equipped with brakes.
- ▲ Use the following maximum speed - tow load weight ratios as a guideline:

  20 mph when weight is less than or equal to the weight of tractor.

  10 mph when weight is double the weight of tractor.
- ▲ **IMPORTANT:** Do not tow a load that is more than double the weight of tractor.

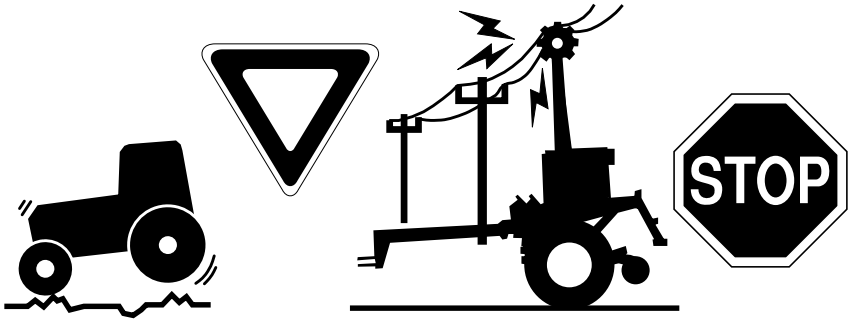

Use A Safety Chain

- ▲ A safety chain will help control drawn machinery should it separate from the tractor drawbar.
- ▲ Use a chain with the strength rating equal to or greater than the gross weight of the towed machinery.
- ▲ Attach the chain to the tractor drawbar support or other specified anchor location. Allow only enough slack in the chain to permit turning.
- ▲ Do not use safety chain for towing.

Practice Safe Maintenance

- ▲ Understand procedure before doing work. Use proper tools and equipment, refer to Operator's Manual for additional information.
- ▲ Work in a clean dry area.
- ▲ Lower the implement to the ground, put tractor in park, turn off engine, and remove key before performing maintenance.
- ▲ Allow implement to cool completely.
- ▲ Do not grease or oil implement while it is in operation.
- ▲ Inspect all parts. Make sure parts are in good condition & installed properly.
- ▲ Remove buildup of grease, oil or debris.
- ▲ Remove all tools and unused parts from implement before operation.

These are common practices that may or may not be applicable to the products described in this manual.

Prepare for Emergencies

- ▲ Be prepared if a fire starts.
- ▲ Keep a first aid kit and fire extinguisher handy.
- ▲ Keep emergency numbers for doctor, ambulance, hospital and fire department near phone.

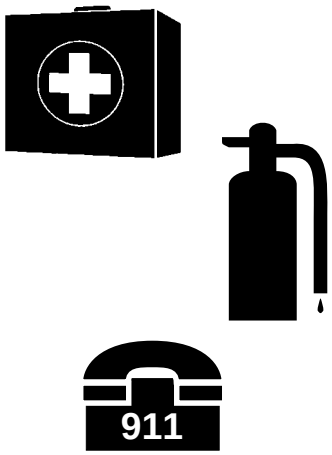

Wear Protective Equipment

- ▲ Protective clothing and equipment should be worn.
- ▲ Wear clothing and equipment appropriate for the job. Avoid loose fitting clothing.
- ▲ Prolonged exposure to loud noise can cause hearing impairment or hearing loss. Wear suitable hearing protection such as earmuffs or earplugs.
- ▲ Operating equipment safely requires the full attention of the operator. Avoid wearing radio headphones while operating machinery.

Keep Riders Off Machinery

- ▲ Riders obstruct the operator's view, they could be struck by foreign objects or thrown from the machine.
- ▲ Never allow children to operate equipment.

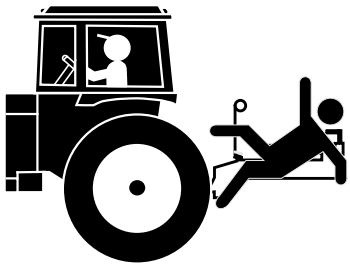

Avoid High Pressure Fluids Hazard

- ▲ Escaping fluid under pressure can penetrate the skin causing serious injury.
- ▲ Avoid the hazard by relieving pressure before disconnecting hydraulic lines or performing work on the system.
- ▲ Make sure all hydraulic fluid connections are tight and all hydraulic hoses and lines are in good condition before applying pressure to the system.
- ▲ Use a piece of paper or cardboard, NOT BODY PARTS, to check for suspected leaks.
- ▲ Wear protective gloves and safety glasses or goggles when working with hydraulic systems.
- ▲ If an accident occurs, see a doctor immediately. Any fluid injected into the skin must be treated within a few hours or gangrene may result.

Safety Labels

Your Overseeder comes equipped with all safety labels in place. They were designed to help you safely operate your implement. Read and follow their directions.

1. *Keep all safety labels clean and legible.*
2. *Replace all damaged or missing labels. To order new labels go to your nearest Land Pride dealer or visit our dealer locator at landpride.com.*
3. *Some new equipment installed during repair requires safety labels to be affixed to the replaced component as specified by Land Pride. When ordering new components make sure the correct safety labels are included in the request.*
4. *Refer to this section for proper label placement.*
   To install new labels:
   a. *Clean the area the label is to be placed.*
   b. *Spray soapy water on the surface where the label is to be placed.*
   c. *Peel backing from label. Press firmly onto the surface.*
   d. *Squeeze out air bubbles with the edge of a credit card.*

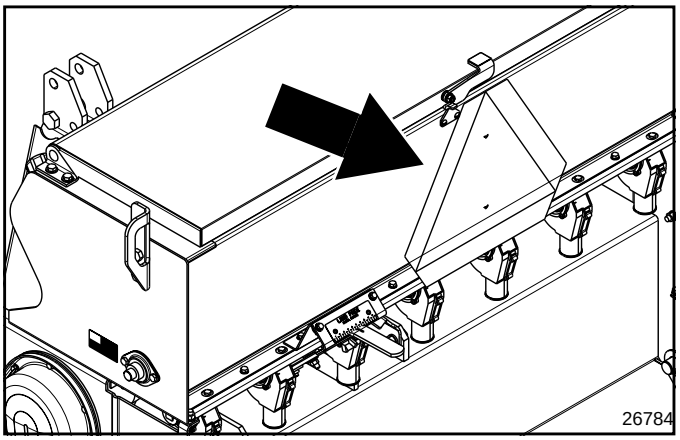

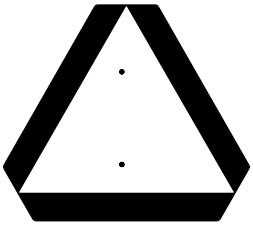

818-055C
Slow Moving Sign

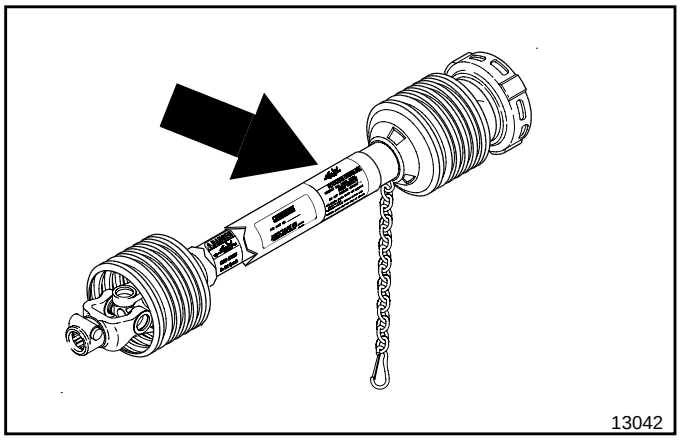

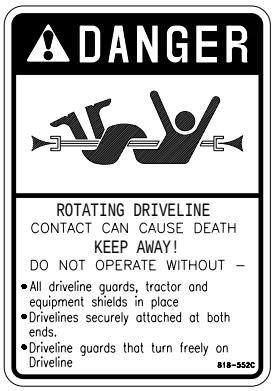

818-552C
Danger! Entanglement

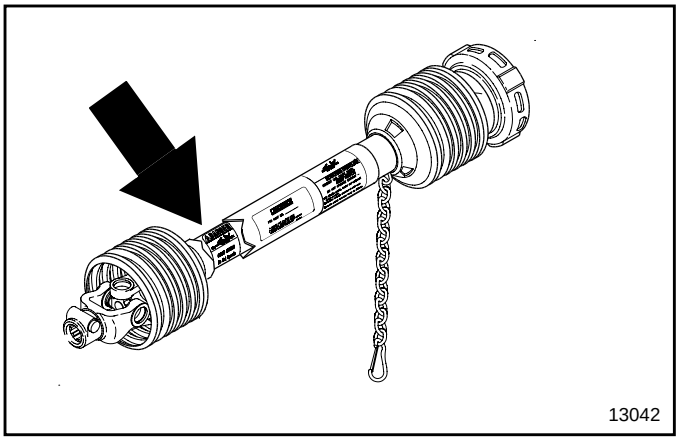

818-540C
Danger! Guard Missing - DO NOT Operate

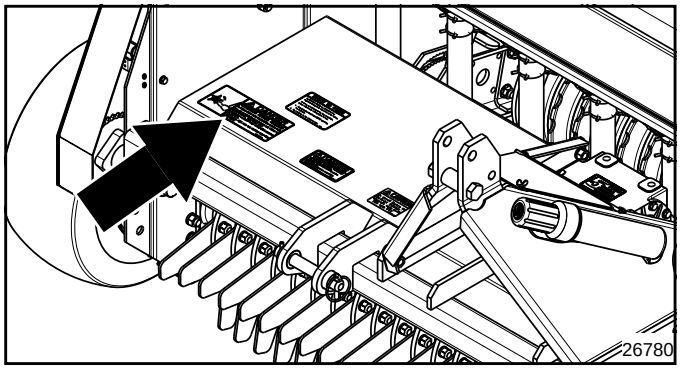

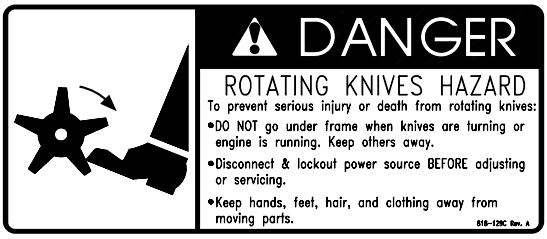

818-129C
Danger! Rotating Knife Hazard

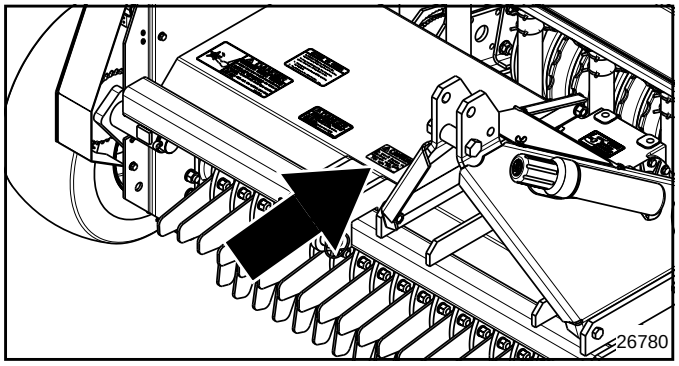

818-130C
Caution! Use 540 rpm PTO only

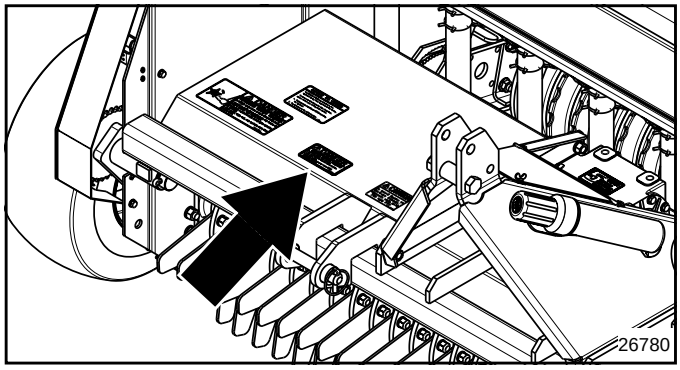

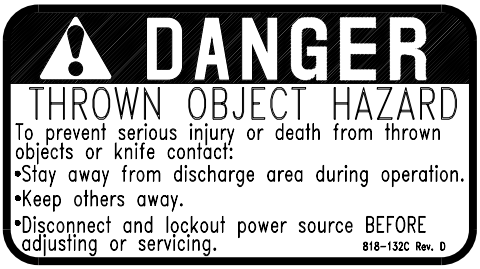

818-132C
Danger! Thrown Object Hazard

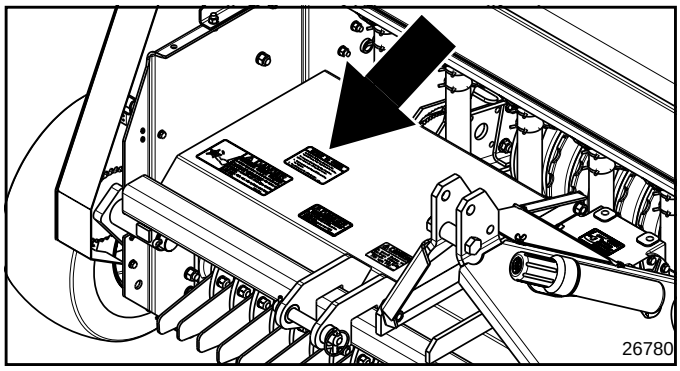

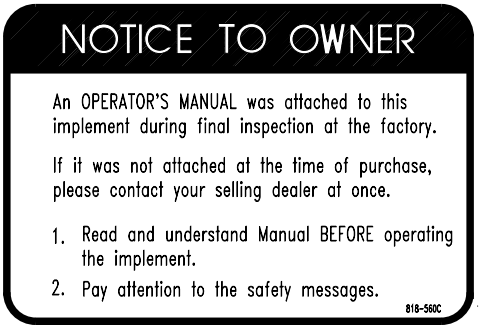

818-560C
Notice! Read & Understand Manual

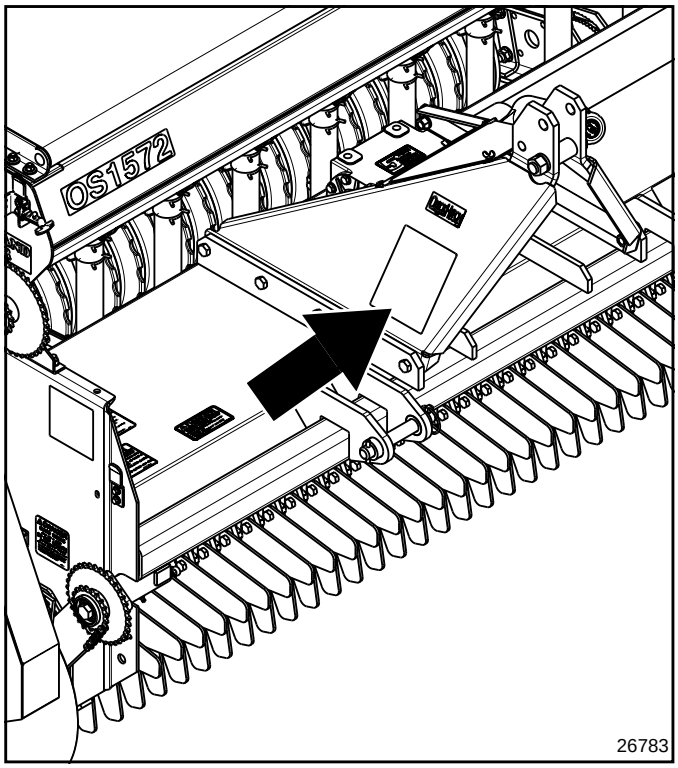

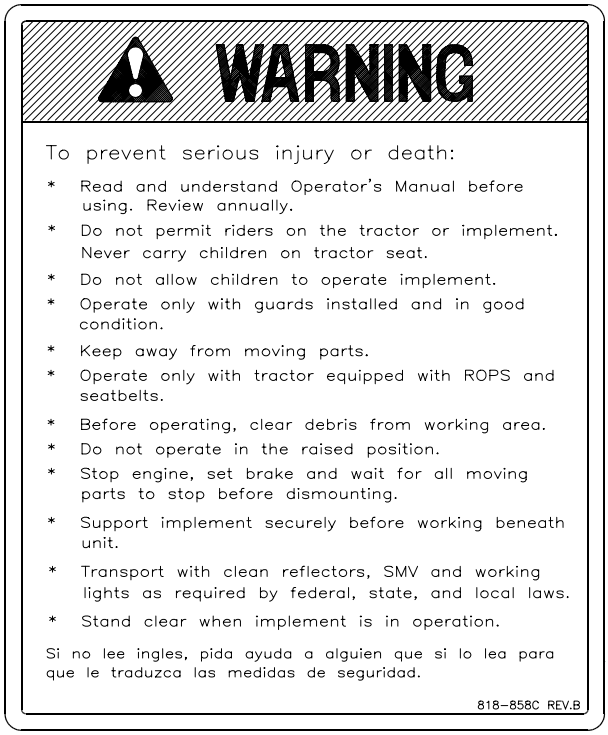

818-858C
Caution! General Safety Information

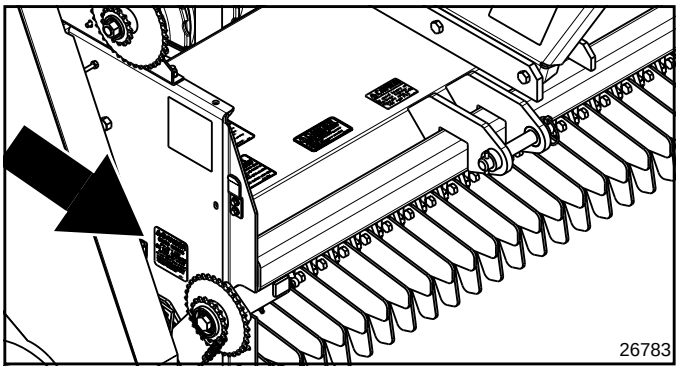

818-543C
Danger! Guard Missing
(Beneath Chain Guard)

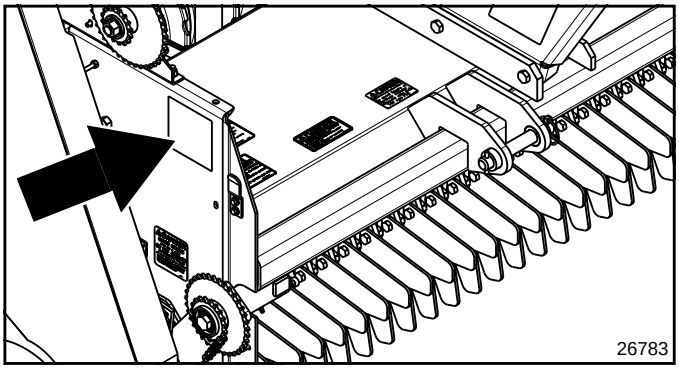

838-111C
Danger! Moving Parts
(Above Chain Guard)

Land Pride welcomes you to the growing family of new product owners.

This Overseeder has been designed with care and built by skilled workers using quality materials. Proper assembly, maintenance and safe operating practices will help you get years of satisfactory use from the machine.

Application

The Land Pride OS1548 and OS1572 Overseeders are a highly versatile and well engineered seed planting systems designed to open up the soil or turf surface, precisely meter out seed, and then press the seed into full soil contact. They may be used for either over-seeding or primary seeding applications. Their versatility and precision seeding capabilities make them an excellent choice for applications in wild game food plots, hunting clubs, resorts, golf courses, sports turf, ranches, turf farms, game preserves, landscaping, professional turf maintenance, and municipalities.

The opening or slitting action is achieved by employing PTO powered to a four or six foot wide rotary vertically driven knives on either 2 inch or 3 inch centers. Depth control of the slitter knives is achieved by either:

1. End-mounted adjustable gauge wheels
2. Front mounted anti-scalping roller attachment
3. Positive height control of the tractors 3-point hitch draft-links.

Seed distribution and placement is accomplished by utilization of high capacity water-tight seed boxes with agitators and seed cups with powdered metal flutes. The agitators deliver seed to the seed cups which in turn dispense seed into clear vinyl transfer tubes attached to an evenly spaced seed distribution manifold. The distribution manifold uniformly and evenly spreads the seed across the working profile of the seeder. Actual rate and metering control is accomplished by either an end mounted gauge wheels drive or by a rear roller seed box drive mechanism. Units equipped with the rear roller drive will be able to achieve a higher germination rate since this drive also serves as a roller-compactor to help achieve maximum seed to soil contact.

An optional spring-tine harrow is available to enhance seed to soil contact. Also, a precision Slit-seeding attachment is available to deliver seed directly into the slits created by the rotary knives. This slit seeder attachment is not compatible with the spring-tine harrow attachment.

See “**Section 6: Specifications & Capacities**” on page 44 and “**Section 7: Features and Benefits**” on page 46 for additional information and performance enhancing options.

Using This Manual

- This Operator’s Manual is designed to help familiarize you with safety, assembly, operation, adjustments, troubleshooting, and maintenance. Read this manual and follow the recommendations to help ensure safe and efficient operation.
- The information contained within this manual was current at the time of printing. Some parts may change slightly to assure you of the best performance.
- To order a new Operator’s or Parts Manual contact your authorized dealer. Manuals can also be downloaded, free-of-charge from our website at www.landpride.com.

Terminology

“Right” or “Left” as used in this manual is determined by facing the direction the machine will operate while in use unless otherwise stated.

Definitions

NOTE: A special point of information that the operator must be aware of before continuing.

IMPORTANT: A special point of information related to its preceding topic. Land Pride’s intention is that this information should be read and noted before continuing.

Owner Assistance

The Warranty Registration card should be filled out by the dealer at the time of purchase. This information is necessary to provide you with quality customer service.

If customer service or repair parts are required contact a Land Pride dealer. A dealer has trained personnel, repair parts and equipment needed to service the Overseeder.

The parts on your Overseeder have been specially designed and should only be replaced with genuine Land Pride parts. Therefore, should your Overseeder require replacement parts go to your Land Pride Dealer.

Serial Number Plate

For prompt service always use the serial number and model number when ordering parts from your Land Pride dealer. Be sure to include your serial and model numbers in correspondence also. Refer to Figure 1: for the location of your serial number plate.

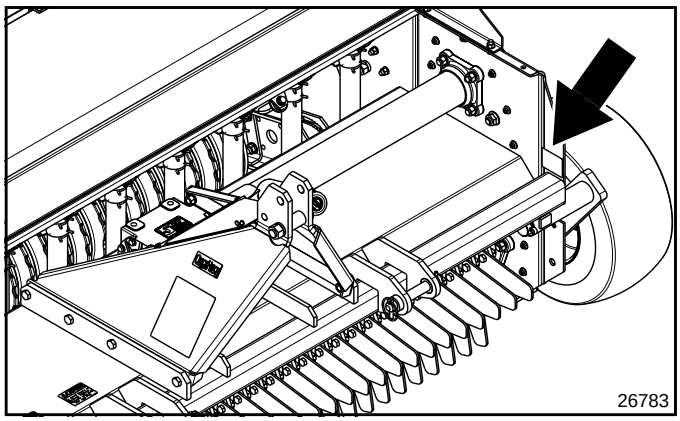

Serial Number Plate Location
Figure 1

Further Assistance

Your dealer wants you to be satisfied with your new Overseeder. If for any reason you do not understand any part of this manual or are not satisfied with the service received, the following actions are suggested:

1. Discuss the matter with your dealership service manager making sure he is aware of any problems you may have and that he has had the opportunity to assist you.
2. If you are still not satisfied, seek out the owner or general manager of the dealership, explain the problem and request assistance.
3. For further assistance write to:

Land Pride Service Department
1525 East North Street
P.O. Box 5060
Salina, Ks. 67402-5060

E-mail address
lpservicedept@landpride.com

Tractor Requirements

Weight & Horsepower

Tractor horsepower should be within the range noted below. Tractors outside the horsepower range must not be used.

Horsepower Rating. . . . . 25-60 HP
3-Point Hitch Type . . . . . .Cat. I
Rear PTO Speed . . . . . .540 RPM
Tractor Weight . . . . . See Important Note Below

IMPORTANT: Ballast may need to be added to your tractor to maintain steering control. Refer to your tractor's operator manual to determine if additional ballast is needed.

Shipping information

Your Overseeder is shipped partly assembled via flat bed truck. It is the responsibility of the dealer to unload and assemble the Overseeder.

Unload all equipment before beginning assembly. Do not attempt any assembly work while Overseeder is on the truck.

Read and understand the previous section, **"Important Safety Information"** page 1, before starting assembly.

Pre-Assembly Checklist

The information in the Pre-Assembly Checklist is general in nature and was written to aid the operator in preparing of the tractor and Overseeder for use, and to provide general operating procedures. The operator's experience, familiarity with the machine, and the following information combined should provide efficient Overseeder operation and good working habits.

Having all the parts and equipment readily at hand will speed your assembly task and make the job as safe as possible. Please review Pre-Assembly Checklist now.

Sling Brackets

Refer to Figure 1-1:

After the unit is uncrated, check to see if the sling brackets (#1) are installed, if not, install one on each end of unit now with 1/2" x 1" long bolts (#2), 1/2" lock washer (#3) and 1/2" hex nut (#4). The sling brackets allow points at each end to hook the chain for lifting of the unit.

NOTE: When hooking hoist chain to sling brackets, be certain to either use a spreader bar on the chain or use a long chain to prevent bending sling brackets.

Pre-Assembly Checklist

	Check	Reference
☐	Make sure miscellaneous assembly tools are on hand: Hammer, tape measure, hacksaw, assortment of wrenches & sockets, 3/8" drill, drill bits and spirit level.	
☐	Have a forklift or hoist with properly sized chains and safety stands on hand capable of lifting 2000 lbs.	
☐	Have a minimum of two people available during assembly. See Specifications on page 44 for unit weights.	
☐	Check to see if auxiliary tractor weights are needed.	
☐	Make sure all major components and loose parts are shipped with the machine.	Operator's Manual
☐	Double check to make sure all fasteners & pins are installed in the correct location. Refer to the Parts Manual if unsure. **NOTE:** All assembled hardware from the factory has been installed in the correct location. Remember location of a part or fastener if removed during assembly. Keep parts separated.	Operator's & Parts Manual
☐	Make sure working parts move freely, bolts are tight & cotter pins are spread.	Operator's Manual
☐	Make sure all grease fittings are in place and lubricated.	Section 4 Page 31
☐	Make sure gearbox is filled with gear lube as indicated in "Lubrication Points".	Section 4 Page 38
☐	Make sure all drive chains are properly tension and aligned.	Operator's Manual
☐	Make sure all safety labels are correctly located and legible. Replace if damaged.	Safety Labels Page 4
☐	Make sure all tires are inflated to the specified psi air pressure.	Section 9 Page 48
☐	Make sure all wheel bolts and axle nuts are tightened to the specified torque.	Section 9 Page 48

Torque Requirements

Refer to "Torque Values Chart" on page 48 to determine correct torque values when tightening hardware.

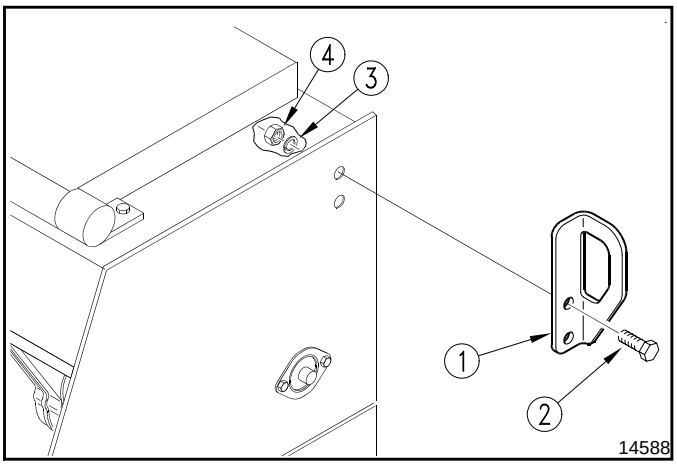

Sling Bracket Installation
Figure 1-1

Quick Change Rotor

Attach a chain, cable or lifting strap to the two Overseeder sling brackets. Use an overhead hoist for the rotor installation. Raise Overseeder.

Refer to Figure 1-2:

Complete steps 1 to 4 if your Overseeder comes equipped with a gauge wheel drive. Skip to step 5 if it does not have gauge wheels.

1. Remove chain cover (#1) on the right hand side by removing 1/4” x 1/2” long bolts (#2).
2. Disconnect right hand spring loaded gauge wheel link (#3) from the right hand gauge wheel arm (#4) by removing 5/8” x 2 1/2” long bolt (#5) and 5/8” nut (#6).
3. Remove drive wheel chain.
4. Remove cotter pin (#7) that retains the right hand gauge wheel arm and remove gauge wheel arm assembly. Be careful not to loose any components.

Refer to Figure 1-3:

5. Remove right hand bearing mount plate (#1) from Overseeder main frame.
6. Separate right hand bearing cover (#2) from right hand bearing mount plate (#1).
7. Between these two parts (#1 & #2) are two bearing mount gaskets (#4). Place one of these bearing mount gaskets between the bearing mount (#3) and the bearing mount plate (#1).
8. Then place the other bearing mount gasket between bearing mount plate (#1) and bearing cover (#2).
9. Retain these parts with 1/2” x 1 3/4” long bolts (#5), 1/2” lock washers (#6) and 1/2” hex nuts (#7). Hand tighten nuts at this time. Final torquing of these bolts will be later in the assembly process.
10. Check to make sure set screws in the hub inside the bearing mount (#3) are loose so it is free to rotate on the rotor shaft.

Refer to Figure 1-4:

11. Lift Overseeder high enough to roll rotor into position under the Overseeder frame.
12. With rotor properly positioned, slowly lower Overseeder making sure the right hand bearing mount plate (#1) is to the <u>outside</u> of the right hand frame end panel.

Refer to Figure 1-5:

13. Connect rotor to rotor drive hub (#1) on the left hand side using 7/16” x 1” long bolts (#3) and 7/16” lock washer (#2). Leave bolts loose.

Refer to Figure 1-4:

14. Connect right hand bearing mount plate to the Overseeder main frame using 1/2” x 1 1/4” bolt (#2), 1/2” lock washer (#3) and 1/2” hex nut (#4). Draw nuts up snug, do not tighten.

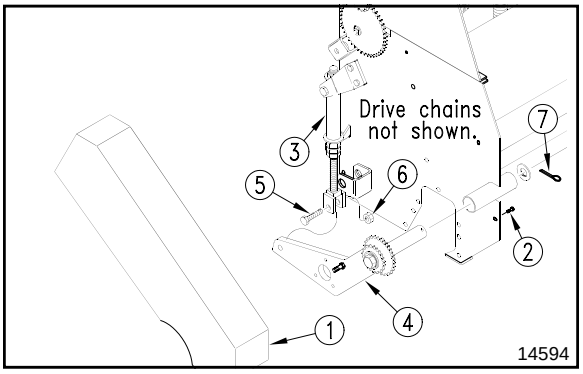

Gauge Wheel Drive Disassembly
Figure 1-2

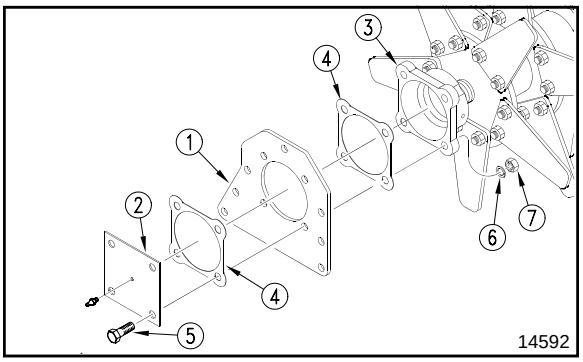

Bearing Mount Plate & Rotor Assembly (RH Side)
Figure 1-3

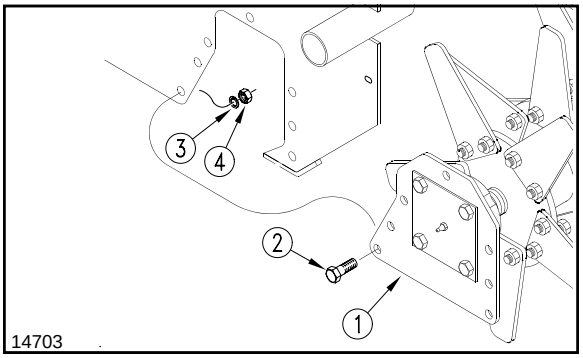

Rotor to Overseeder Assembly (RH Side)
Figure 1-4

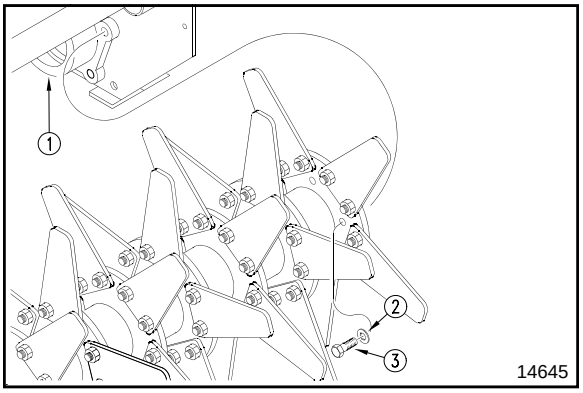

Rotor to Overseeder Installation-Left Hand Side
Figure 1-5

15. Torque all bolts to the proper specifications, see *Torque Values Chart* in the **"Appendix"** starting on Page 48. Tighten bolts in the following order:
    a. Rotor to rotor drive hub.
    b. Bearing mount plate to Overseeder main frame.
    c. Bearing cover thru bearing mount plate to bearing mount.
16. Position hub inside bearing mount against bearing seal and tighten set screws.
17. Add grease to right hand bearing by using grease zerk located on the right hand bearing cover.
18. Reassemble gauge wheel & drive chains. Reattach chain guard.

Rear Roller Assembly

Refer to Figure 1-6:

1. Attach packer wheel assembly (#1) to back of Overseeder frame using 1" x 3 11/16" long clevis pins (#2), 1" flat washers (#3) and 3/16" x 1 3/4" long cotter pins (#4). If your Overseeder has a rear roller drive, see *Rear Roller Drive* below and skip step 2.
2. Attach support chains (#5) to back of frame and to packer wheel arms using 5/16" utility clevises (#6).

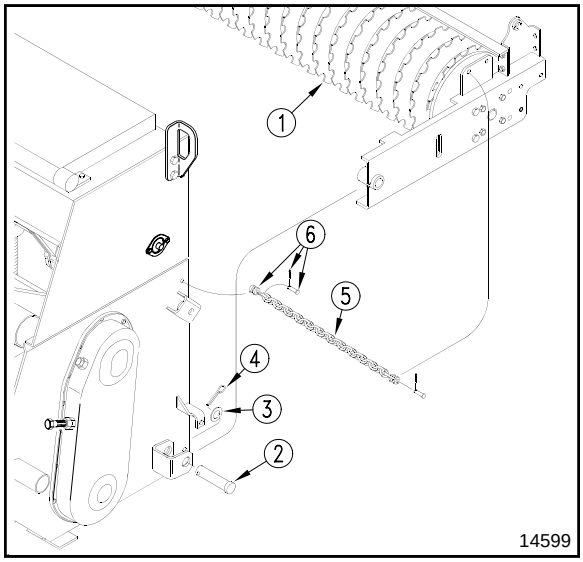

Rear Roller Installation
Figure 1-6

Gauge Wheel Drive

Refer to Figure 1-7:

1. Bolt drive spindle and hub assembly (#1) to the right hand gauge wheel arm (#2) using 5/16" x 1 1/2" long bolts (#3) and 5/16" lock nuts (#4).
2. Install wheel assembly (#5) to right hand wheel hub with 1/2" x 1 3/8" long lug bolts (#6) and 1/2" lug nuts (#7). Follow the same steps for the left hand side, except use non-drive spindle and hub assembly (#8) and bolts (#6).

> **IMPORTANT:** Roller chains must be installed on the seeder at the correct gear ratio. Refer to *Seeding Adjustments* in the **"Adjustments"** section starting on Page 18 to determine correct chain installation.

3. Bolt chain guard (#9) to the right hand frame end plate using 1/4" x 1/2" long bolts (#10).

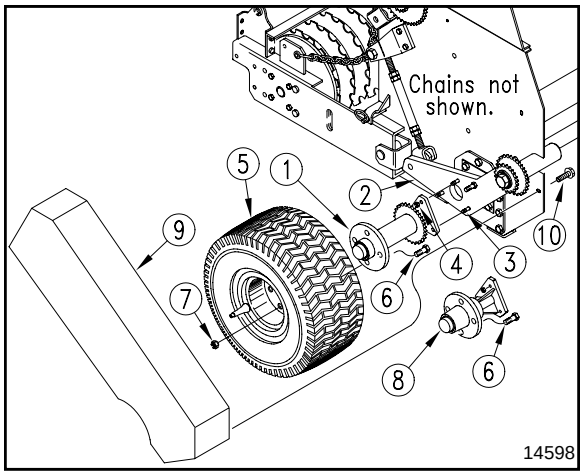

Gauge Wheel Drive Assembly
Figure 1-7

Rear Roller Drive

Refer to Figure 1-8:

1. Attach solid links (#1) to back of frame with 5/8" x 2 3/4" long bolts (#2) on top and 5/8" x 1 3/4" bolts (#4) on the bottom.

> **IMPORTANT:** Roller chains must be installed on the seeder at the correct gear ratio. Refer to *Seeding Adjustments* in the **"Adjustments"** section starting on Page 18 to determine correct chain installation.

2. Bolt chain guard (#9) to end plate using 5/16" x 6" bolt (#10), 5/16" lock washer (#11) and 1/4" x 1/2" bolts (#12).
3. If rear roller (#13) is in the short arm position as shown, attach front chain guard (#7) and rear chain guard (#6) with 5/16" x 2 1/2" bolts (#8) in the locations shown.

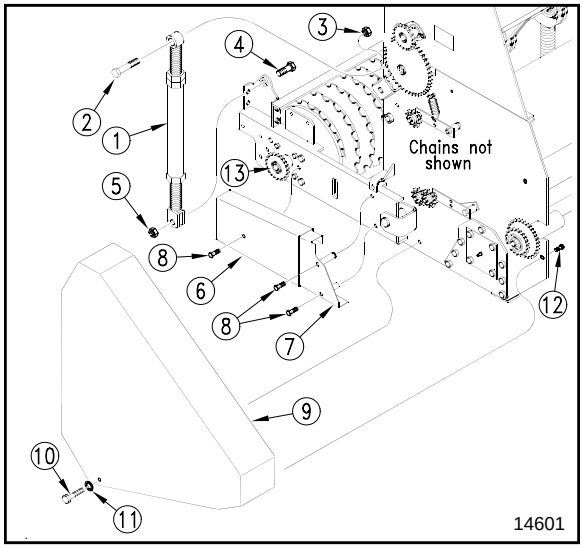

Rear Roller Drive Assembly with Short Arm
Figure 1-8

Refer to Figure 1-9:

4. If rear roller (#13) is in the long arm position as shown. Attach front chain guard (#1) and rear chain guard (#2) with 5/16” x 2 1/2” bolts (#3) in the locations shown.

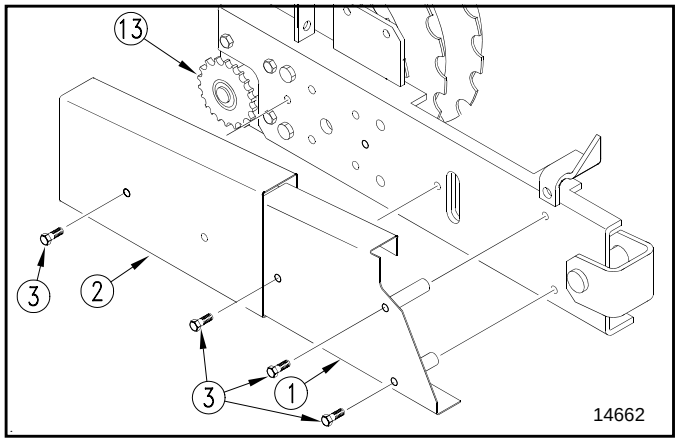

Long Arm Chain Guard Location
Figure 1-9

Driveline Installation

The tiller driveline is coupled to the tractor shaft with either push pin couplers, pull collar couplers or a combination of both and on the implement end with a slip clutch and pull collar coupler for protection from shock loads.

Always engage PTO at low engine rpm to minimize driveline start-up torque. **Drivelines with friction clutches must go through a “run-in” operation prior to initial use and after long periods of inactivity**. See “Section 4: Maintenance & Lubrication” on page 31 for a detailed description of maintaining the driveline.

If the Overseeder is to be used on more than one tractor, an additional PTO shaft may be required - especially if a quick hitch is used.

CAUTION

Tractor PTO shields and guards must be in place at all times during operation!

CAUTION

Do not use a PTO adaptor with a quick hitch. A PTO adapter will increase the strain on the tractor’s PTO shaft and can damage the PTO shaft and mower driveline.

IMPORTANT: Some tractors are equipped with multi-speed PTO ranges. Be certain your tractor ‘s PTO is set for 540 rpm.

IMPORTANT: Avoid premature driveline breakdown. A driveline that is operating **must not exceed** an angle of 25 degrees up or down while operating the 3-point lift. See Figure 1-10.

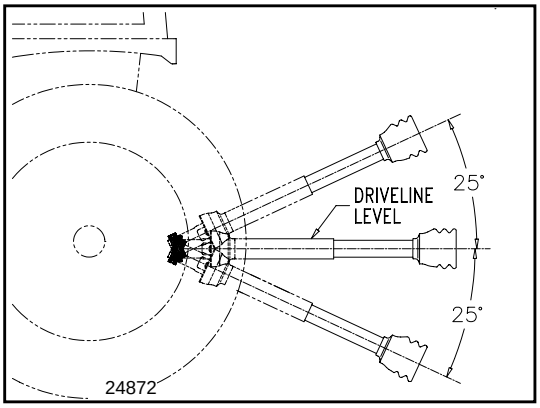

Maximum PTO driveline Movement During Operation
Figure 1-10

IMPORTANT: Always check driveline maximum and minimum length during initial set-up, when connecting to a different tractor and when alternating between using a quick hitch and a standard 3-point hitch. More than one driveline may be required to fit all applications.

IMPORTANT: It is necessary to aligning the tractor’s PTO shaft level with Overseeder’s PTO shaft when checking to see if the driveline’s minimum length is correct. Too long a driveline can damage the tractor, gearbox and driveline.

Check Driveline Minimum Length

Refer to Figure 1-11:

1. Start tractor and slowly engage tractor’s hydraulic 3-point lift to raise the lower arms until the Overseeder’s driveline shaft is approximately level with tractor's PTO shaft.
2. Slide slip clutch end of driveline over the splined input shaft of gearbox. Secure with driveline yoke locking device.

IMPORTANT: For easier access to gearbox input shaft, remove driveline guard at the gearbox.

3. Slide opposite end of driveline yoke over the tractor’s splined PTO shaft. Secure with driveline yoke locking device. Skip to step 4 if driveline fits between tractor and implement.

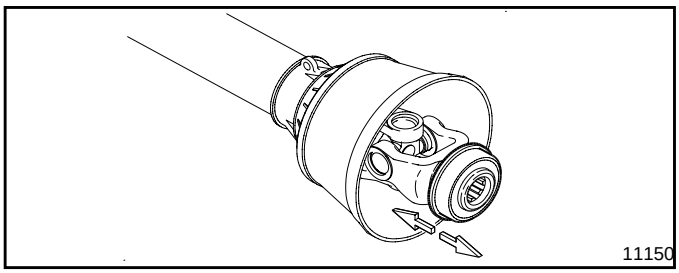

Driveline Quick Disconnect
Figure 1-11

Refer to Figure 1-12:

4. The PTO driveline will require shortening if it is too long to fit between the tractor and gearbox. Shorten driveline as follows:
   a. Place tractor gear selector in park, shut tractor engine off, set park brake and remove switch key.
   b. Pull driveline apart as shown in Figure 1-12: on page 13. Attach the outer yoke section to the tractor shaft and inner yoke section to the cutter gearbox shaft. Pull on each driveline section to be sure the universal joints are secured to the shafts.
   c. Hold the driveline sections parallel to each other to determine if they are too long. The inner and outer shields on each section should end approximately 1" short of reaching the universal joint shield on the adjacent section (see "**B**" dimension). If they are too long, measure 1" ("**B**" dimension) back from the universal joint shield and make a mark at this location on the inner and outer driveline shields.
   d. Cut off the shield at the mark ("**X**" dimension). Cut the same amount off the shaft ("**X1**" dimension). Repeat cut off procedure ("**Y**" & "**Y1**" dimensions) to the other driveline half.
   e. Remove all burrs and cuttings.

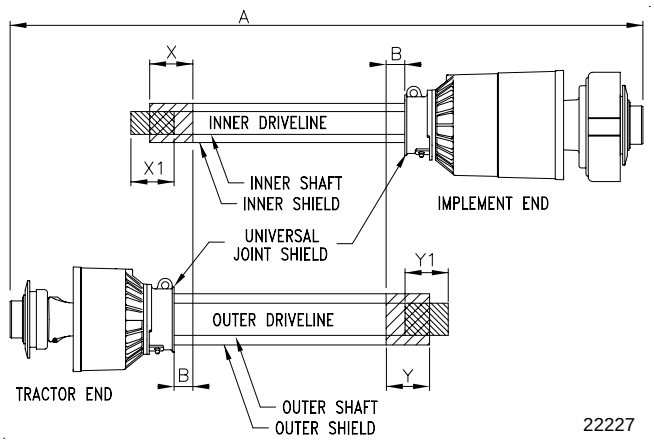

PTO Driveline Shortening
Figure 1-12

Check Driveline Maximum Length

Make sure you have gone through the steps in "**Check Driveline Minimum Length**" on page 12 before checking maximum length.

Refer to Figure 1-13:

The driveline maximum length must, when fully extended, have a minimum overlap of the profile tubes by not less than 1/3 the free length with both inner and outer profile tubes being of equal length.

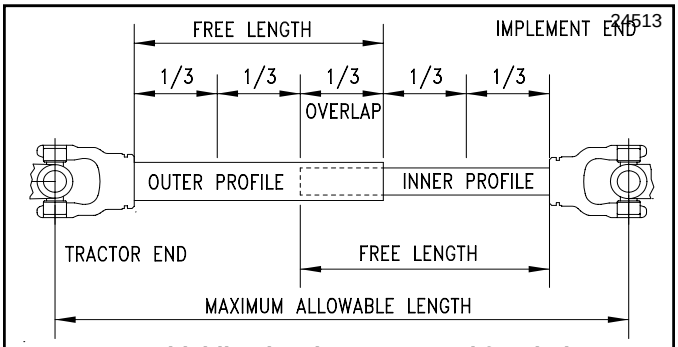

Outer Shielding has been removed for clarity.

Driveline Maximum Length
Figure 1-13

1. Apply multi-purpose grease to the inside of the outer shaft and reassemble the driveline.
2. Assemble the two driveline profiles together with just 1/3 overlapping of the profile tubes as shown in Figure 1-13. Measure and record this overall length for checking driveline length in step 9 below.
3. Attach inner driveline yoke end to the Overseeder gearbox input shaft.
4. Attach outer driveline yoke end to the tractor's PTO shaft.
5. The driveline should now be moved back and forth to insure that both ends are secured to the tractor and Overseeder PTO shafts. Reattach any end that is loose.

IMPORTANT: A small chain is supplied with the driveline. This chain must be attached to the inner driveline shield and to the Overseeder to restrict shield rotation.

6. Hook driveline safety chain in the hole in the inner driveline guard. Attach the other end to the Overseeder's main frame.
7. Start tractor and raise Overseeder just enough to remove blocks used to support the Overseeder frame in step 4a on page 13.
8. Slowly engage the tractor's hydraulic 3-point to lower the Overseeder. Check for sufficient drawbar clearance. Move drawbar ahead, aside or remove if required.
9. Raise and lower implement to find maximum extended driveline length. Check to make certain that the driveline overall length does not extend beyond the maximum recorded length in step 2 above.

Operating Check List

Hazard control and accident prevention are dependent upon the awareness, concern, prudence and proper training involved in the operation, transport, maintenance and storage of the seeder. Therefore, it is absolutely essential that no one operates the Overseeder without first having read, fully understood and become totally familiar with the Operator's Manual. Make sure the operator has paid particular attention to:

- **Important Safety Information**, pages 1 to 3
- **Section 1: Assembly & Set-up,** page 9
- **Section 2: Operating Instructions**, page 14
- **Section 3: Adjustments**, page 18
- **Section 4: Maintenance & Lubrication**, page 31

The following information should be known and inspections made before operating your seeder.

Operating Checklist

✔	Check	Page No.
	Read and follow all Safety Rules carefully. Refer to "Important Safety Information".	Page 1
	Make sure all guards and shields are in place. Refer to "Important Safety Information".	Page 1
	Read and follow Hook-up & preparation instructions. Refer to "Section 1: Assembly & Set-up".	Page 9
	Read and follow all operating procedures. Refer to "Section 2: Operating Instructions".	Page 14
	Read and make all required adjustments. Refer to "Section 3: Adjustments".	Page 18
	Read and follow all Maintenance Instructions. Refer to "Section 4: Maintenance & Lubrication".	Page 31
	Read and follow all Lubrication Instructions. Refer to "Lubrication Points".	Page 38
	Make sure all gearboxes are properly lubricated. Refer to Gearbox lubrication.	Page 40
	Check tire pressure. Refer to "Tire Inflation Chart"	Page 48
	Inspect seed cups and seed tubes for foreign matter.	Page 18
	Set speed change sprocket for drive type desired.	Page 19
	Set seed rate. See "**Seed Rate Charts**".	Page 20
	Check seeder initially and periodically for loose bolts and pins. Refer to "Torque Values Chart".	Page 48

Tractor Hook-Up

DANGER

Tractor hook-up to equipment is dangerous and can result in serious injury or death. ***Do not*** *allow anyone to stand between the seeder and tractor during hook-up operations.* ***Do not*** *operate hydraulic 3-point lift controls while someone is directly behind the tractor or near the seeder.*

When using tractors with multispeed PTO, be certain PTO is set for 540 RPM.

1. Slowly back tractor up to Overseeder while using the tractor's hydraulic control to align the tractor's lower hitch link holes with the seeder's clevis lug holes.
2. Engage tractor park brake, shut tractor engine off and remove key before dismounting from tractor.
3. Attach tractor's 3-Point lower links to the seeder's lower hitch clevises using 7/8" diameter hitch pins. Secure hitch pins with linch pins.
4. Attach tractor's top center link to the seeder's top hitch using a 3/4" diameter hitch pin. Secure hitch pin with a linch pin.
5. Ensure that the lower hitch arms are blocked to prevent excessive side movement.
6. Return to tractor and slowly operate controls up and down to make sure seeder clears tractor tires, frame and drawbar. Move or remove drawbar if it interferes.
7. Manually adjust one of the tractor's lower lift arms up or down to level the seeder from left to right.
8. With the seeder resting on level ground, manually adjust tractor's top link until the seeder is level from front to rear.

Refer to Figure 2-1:

9. Remove rear roller stop pin (#1) and hairpin cotter (#2) out of parking position.

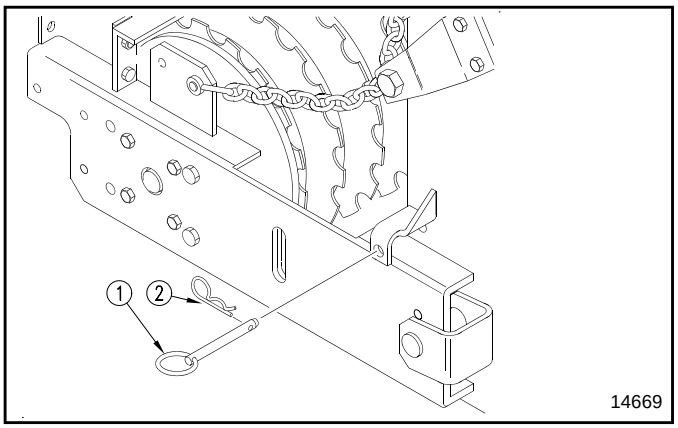

Rear Roller Stop Pin in Parking Position
Figure 2-1

Transporting

CAUTION

When traveling on public roads whether at night or during the day, use accessory light and devices for adequate warning to operators of other vehicles. Comply with all federal, state and local laws.

1. This seeder can be transported with a full box of seed, however; it is best not to do this unless necessary because the increased weight does increase the chances for problems on the road.
2. Select a safe ground travel speed when transporting from one area to another. Do not exceed 20 miles per hour travel speed. When traveling on roadways, transport in such a way that faster moving vehicles may pass you safely.
3. Reduce tractor ground speed when turning. Leave enough clearance so the seeder does not contact obstacles such as buildings, trees or fences.
4. Shift tractor to a lower gear when traveling over rough or hilly terrain.

Filling the Seed Box

CAUTION

Always lower the Overseeder to the ground to check seed level in the seed box and before filling the seed box. This will keep the rollers from turning while working around them.

1. Always lower the Overseeder to the ground, engage tractor park brake, shut tractor engine off and remove key before filling the seed box.
2. Release lid latch handle and open seed box lid until over center latch arms have locked in place. Doing this will keep the lid from falling while filling the box.
3. Fill seed box from the rear while standing on the ground. **Do not** step or climb on the rear roller to fill the seed box. **Make sure** the rear roller is on the ground so it cannot turn while filling the box.
4. The bag opener (sharp point on top of the baffle plate) can be used to tear open the seed bags.
5. Maker certain the seed box is filled uniformly to insure one side dose not run out of product ahead of the other side.
6. Close lid by pulling on the handle of the over center latch arms with one hand while holding the lid up with the other hand. Lower lid gently while keeping hands and fingers clear.
7. Lock lid down with lid latch handle to keep moisture out.

How the Seeder Works

The following is a brief description of how your Overseeder works.

The power to drive the seed cups comes from the gauge wheels or rear roller turning against the ground while traveling. Power is then transmitted through roller chains to the seed cups. Seed is metered out of the cups at a rate proportional to the distance driven. This ensures that the rate applied in pounds per 1000 square feet or pounds per acre remains constant as ground speed is varied.

Cup metering speed can be adjusted to either a high or low range by changing the speed change sprocket. Also, the rate seed falls through the seed cups is adjustable using the seed rate adjustment lever located at the back of the seeder.

Metered seed is broadcast onto the ground surface and into the slits made by the rotor knives. Seeds drops in front of the rear roller to allow the roller to firm the soil around the seeds.

Parking

The following steps should be done when preparing to store the Overseeder or unhitching it from the tractor. See also *Storage* under the **"Maintenance and Lubrication"** section on Page 31 for additional information on long term storage of your Overseeder.

1. Park the Overseeder on a level, solid area.
2. Shut off tractor engine and engage parking brake.
3. Refer to Figure 2-2. Place rear roller stop pin (#1) and hairpin cotter (#2) in parking position.
4. Unhitch from tractor.

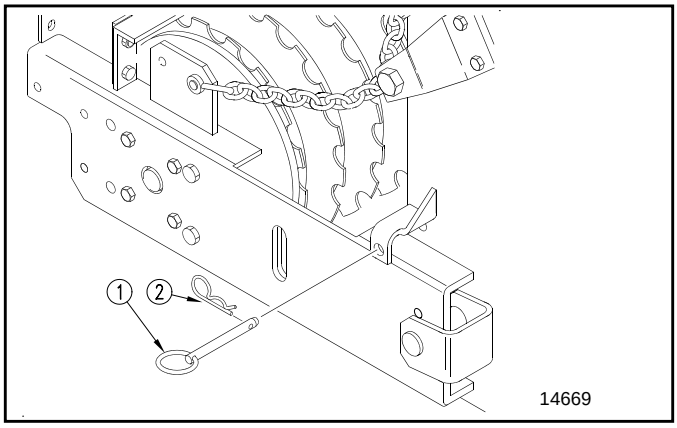

Rear Roller Stop Pin in Parking Position
Figure 2-2

General Notes for Field Operations

Before proceeding with the first time set-up or before making any adjustments mentioned in this section, make every effort to obtain and hitch a tractor to the Overseeder.

1. This Overseeder can be transported with a full box of seeds. It is best not to do this unless necessary because the increased weight does increase the chances for problems on the road.
2. Do not exceed 20 miles per hour when transporting.
3. Calibrate your seeder sprocket speed and seed cup rate adjustment lever based on type of seed you are using. Calibration information is located on the inside of your box lid or on page 18.
4. Refer to Figure 3-1 on page 18. Make sure the feed cup door adjustment handle on each cup is set the same across the Overseeder. Usually in the highest position.
5. Never allow anyone to ride on the Overseeder.
6. Maximum seeding speed will vary according to soil conditions.
7. Check oil level in gearbox and chaincase.
8. Check that all plugs and caps have been replaced properly.
9. Be sure all Overseeder knives, bolts and nuts are tight.
10. Be certain all guards and shields are in place and secure.
11. Grease PTO shaft and all other grease fittings.
12. Clear the area to be over-seeded of rocks, branches and other foreign objects.
13. Tall grass and weeds should be mowed before overseeding.
14. Operate with 540 rpm PTO tractor.
15. At first begin overseeding at a slow forward speed and shift up until the desired speed is achieved.
16. Overseeder knives will cut better at a faster rotor speed than at reduced throttle.
17. Do not engage PTO at full throttle.
18. Never back up with Overseeder in the ground.
19. Overseeding should not be done in wet conditions as soil will stick to the knives.
20. After overseeding the first 50 feet, stop and check to see that the Overseeder is adjusted properly.
21. Do not make sharp turns or attempt to back up while Overseeder is in the ground.
22. Do not engage PTO with machine in the fully raised or fully lowered position.

General Operating Instructions

Once you have read the operators manual, properly installed you Land Pride Overseeder to the tractors 3-point hitch, ran through the Operating Check List, filled the hopper with seed, and calibrated the unit for proper seed rate delivery, it's time to do some serious seeding.

The power to run the horizontal rotor shaft, which is equipped with the vertically mounted slitter knives, is provide by the tractors 540 rpm PTO. You should have already set the desired slitter depth by adjusting the height of the side-mounted gauge wheels or the front mounted anti-scalping roller, whichever one your unit is so equipped with. The only other means of achieving slitter depth control, if your unit is equipped with the rear drive roller only, is by maintaining the depth stop control on the draft-links of your tractors three-point hitch.

The OS1548 and OS1572 have ground driven seed delivery systems. The power to drive the seed metering system comes from the forward momentum of the tractor. As the tractor moves forward the ground driven rear roller compactor or side mounted gauge wheels transfer power via chain driven sprockets to the seed metering system so the seed rate remains constant and in direct proportion to the distance traveled and is affected very little by actual ground speed. The most accurate and productive seed rate applications will usually be achieved between three and 5 miles per hour. Seeding should not be attempted in wet or muddy conditions.

Now that you understand how it works its time to begin seeding. You should already have removed any large stones or obstacles from the area you plan to seed. Line the tractor up for the first pass and choose a tractor gear selection that will deliver a ground speed of approximately 3-5mph. Lower the three-point hitch and seeder slowly to a point approximately six inches off of the ground. Raise the tractor RPM slightly and engage PTO. Raise PTO speed to 540 rpm and begin driving forward slowly at first until you get comfortable with what you are doing. As you approach the end of the lane you are seeding slow down and come to a stop. Raise the Overseeder off of the ground approximately six inches. With Overseeder raised, line up for your next pass and repeat the process. Look back often and avoid making very sharp turns with your Overseeder on the ground if you expect to develop a uniform seeding pattern. The more experienced you become the better you will get at developing beautiful seed plots and beautiful lawns.

Always clean the seeder out and perform all maintenance prescribed in the Operator's Manual at the end of each planting. Never leave seed stored in the hopper or seed cups for prolonged periods.

Seeding Adjustments

NOTE: Seeding rates will vary greatly with variations in sizes of seeds, although the seeding rates listed in this manual are based on an average seed size, we recommend that you test and adjust your Overseeder using the procedures listed below to help insure an accurate seeding rate.

1. Use seed rate charts beginning on Page 20 to determine correct seeding rate and adjustments:
   a. Decide whether your drive needs to be set-up for low range or high range. If necessary, change the speed change sprocket to accommodate the correct speed range. refer to Figure 3-2 and Figure 3-3 on page 19.

Refer to Figure 3-1:

IMPORTANT: Use seed rate charts beginning on Page 20 as a guide. There are many factors which will affect seeding rates: weight of seed, seed treatment, soil surface condition and rear roller slippage. Minor adjustments to the seed rate adjustment lever may be needed to compensate for these factors.

2. Locate seed rate adjustment lever at rear of seeder and move it to indicator number obtained in the seed rate charts. For best results, first move lever all the way to the left. Then move lever to desired setting, moving from a lower to a higher number.
   - Increase seed rate if seed is lighter than average.
   - Decrease seed rate if seed is heavier than average.
3. Complete the following procedure to calibrate dispersal rate for your specific seed.
   a. Place several pounds of seed over three of the seed cups at the outboard end of the seeder. **Do not** allow any of the seed to reach other cups.
   b. Pull the seed tubes out of these three drops.
   c. Support drive unit off the ground as follows:
      - **Gauge wheel drive units**: Raise and support drive tire (right tire) off the ground using a jack.
      - **Rear roller drive units**: Raise and support rear roller off the ground using a jack.

NOTE: Rotate rear roller by grasping the roller and pulling away from the seeder at the bottom of the roller and pushing toward the seeder at the top.

   d. Rotate tire or rear roller to make sure drive system is working properly and that the feed cups are free from foreign matter.
   e. Place a container under the three seed tubes to gather seed as it is metered.
   f. Rotate gauge wheel or rear roller the number of rotations noted in the table below. Be sure to check the three feed cups to make sure each cup has plenty of seed coming into it.

Number of Gauge Wheel & Rear Roller Rotations

Coverage=	1000 Sq. Ft.		1/10 ACRE	
Model No	Wheel	Roller	Wheel	Roller
OS1548	51	67	222	292
OS1572	36	47	157	206

*** Seed rates listed in charts for gauge wheel units are based on Overseeder having 18 x 8.50 x 8 turf tires with 20 psi.**

   g. Weigh the seed which has been metered out and divide that weight by three to get the number of pounds metered by each seed cup. If your weight is in ounces, divide the weight by 48 to get the number of pounds metered by each seed cup.
   h. Next, multiply number of pounds per cup by number of cups on your seeder to arrive at total pounds per 1000 sq. ft. or pounds per 1/10 acre.
   i. If calculations are based on 1/10 acre, multiply total pounds by 10 to arrive at total pounds per acre.
   j. If this figure (total pounds) is different than desired, then readjust your seed adjustment lever accordingly.
4. You may want to repeat calibration procedure if results of your calibration vary greatly from suggested settings in the chart.

NOTE: To determine seed rates for seeds not listed on the charts, compare weight and size to those listed in the seed rate charts and use a similar setting. Follow steps 4 and 5 to calibrate seed rate.

IMPORTANT: Remember, field conditions will affect seeding rates. When seeding, check amount of seed you are using by noting acres or square feet seeded, amount of seed added to seeder, and level of seed in the seed box. You may need to adjust the seeding rate slightly to compensate for field conditions if you suspect that you are seeding more or less seed than desired; and you have accurately calibrated the seeder for your seed.

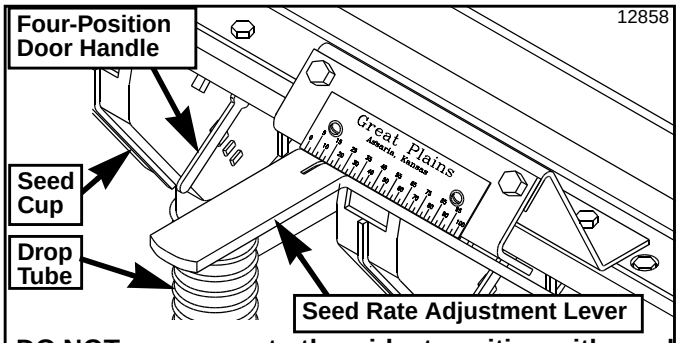

DO NOT open cups to the widest position with seed in the box unless complete clean out is desired.

Seed Rate Adjustment Handle
Figure 3-1

IMPORTANT: Refer to Figure 3-1 on page 18: This Overseeder is equipped with a four-position feed cup door on each feed cup. The highest handle position is for small seeds, the second position is for mid size seeds and third positions is for larger seeds. You should only need to use the highest position for application with this Overseeder. MAKE SURE all handles are in the same position before seeding. Do not open four-position door handle to the wide open position (lowest position) with seeds in the box unless complete clean out is desired.

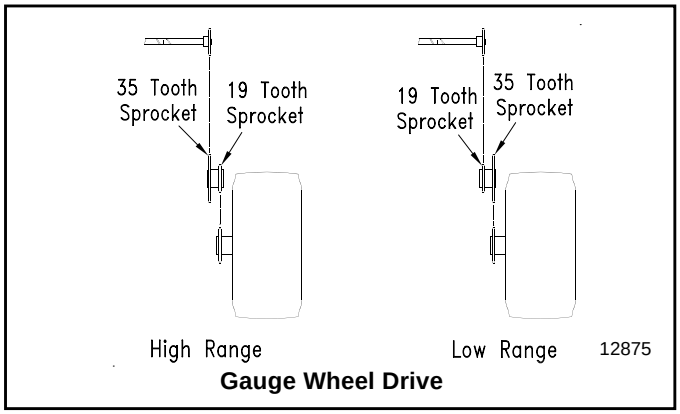

Gauge Wheel Drive

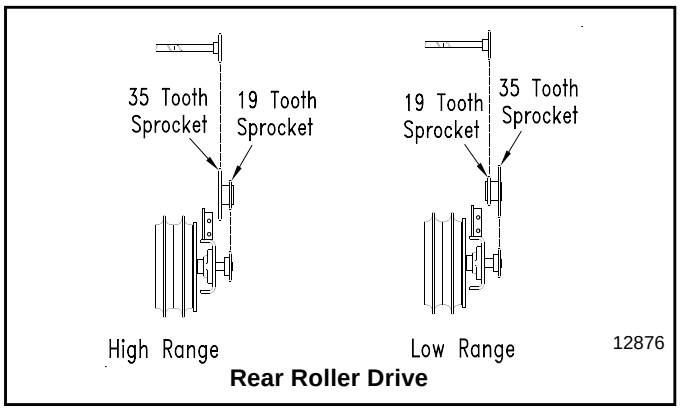

Rear Roller Drive

Drive Sprocket Alignments
Figure 3-2

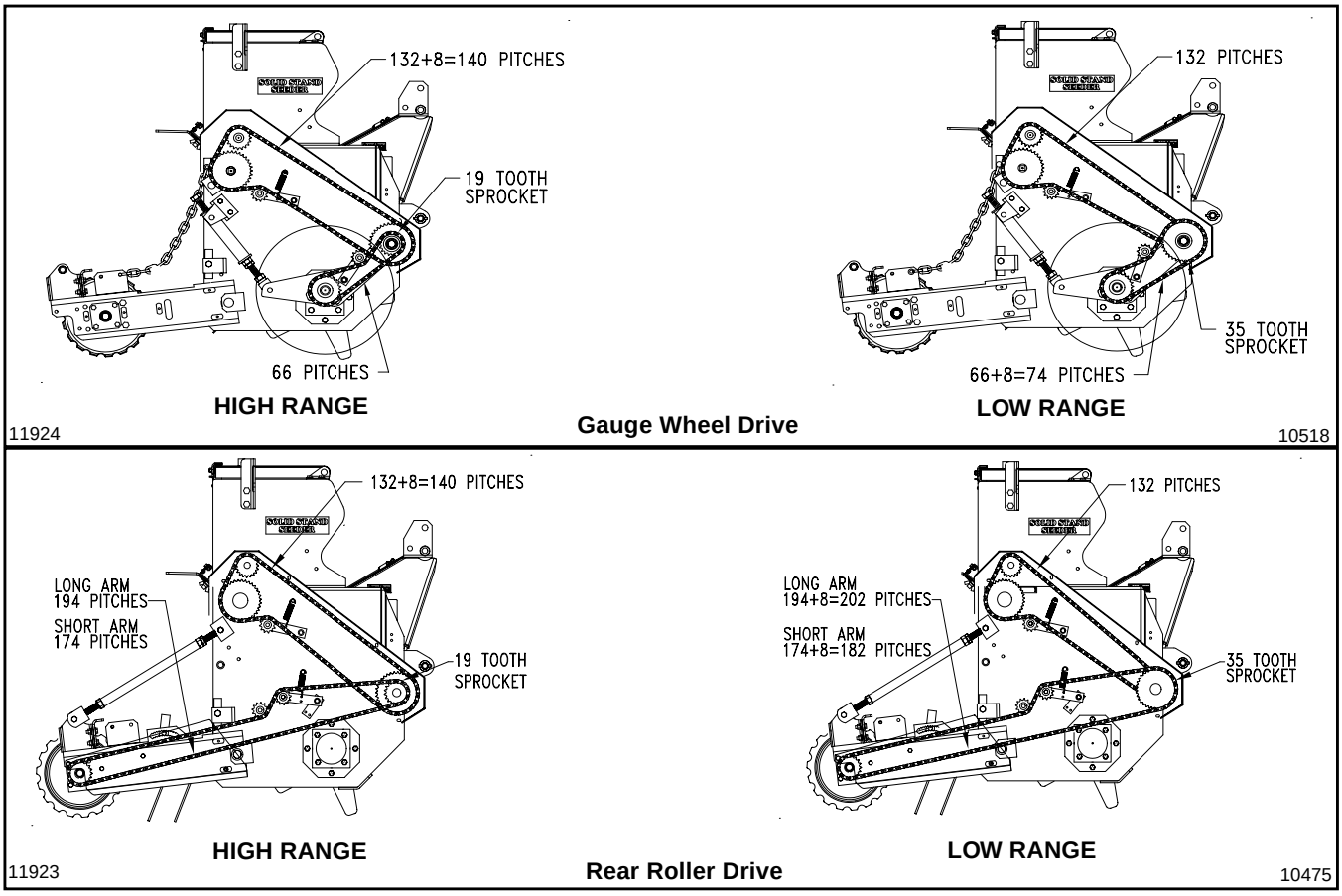

Drive Sprocket Arrangements
Figure 3-3

Seed Rate Charts (English)

Cup Setting	0	5	10	15	20	25	30	35	40	45	50	55	60	65	70	75	80	85	90	95	100
Alfalfa (Pounds per Acre)																					
High Range	0	54	125	198	269	341	412	485	555	626	699	769	842	913	985	1056	1129	1199	1270	1343	1413
Low Range	0	17	40	63	85	108	131	154	176	198	221	244	267	289	312	335	358	380	402	425	448
Alfalfa (Pounds per 1000 Square Feet)																					
High Range	0.0	1.2	2.9	4.5	6.2	7.8	9.2	11.1	12.8	14.4	16.1	17.7	19.4	21	22.6	24.3	25.9	27.6	29.2	30.9	32.5
Low Range	0.0	0.4	0.9	1.4	2	2.5	3	3.5	4	4.6	5.1	5.6	6.1	6.6	7.2	7.7	8.2	8.7	9.2	9.8	10.3
Bent Grass (Pounds per Acre)																					
High Range	0	37	80	115	152	185	206	239	265	293	326	358	380	413	439	467	499	528	554	586	619
Low Range	0	17	29	42	54	66	77	89	99	110	122	131	140	149	159	168	175	184	191	198	205
Bent Grass (Pounds per 1000 Square Feet)																					
High Range	0.0	0.8	1.8	2.6	3.5	4.2	4.7	5.5	6.1	6.7	7.5	8.2	8.7	9.5	10.1	11.5	12.1	12.7	12.7	13.5	14.2
Low Range	0.0	0.4	0.7	1	1.2	1.5	1.8	2	2.3	2.5	2.8	3	3.2	3.4	3.6	3.9	4	4.2	4.4	4.5	4.7
Bermuda - Unhulled (Pounds per Acre)																					
High Range	0	61	101	161	206	250	295	341	386	430	475	521	565	610	654	701	745	789	834	880	925
Low Range	0	19	32	51	65	79	93	108	122	136	150	165	179	193	207	222	236	250	264	279	293
Bermuda - Unhulled (Pounds per 1000 Square Feet)																					
High Range	0.0	1.4	2.3	3.7	4.7	5.8	6.8	7.8	8.9	9.9	10.9	12	13	14	15	16.1	17.1	18.1	19.2	20.2	21.3
Low Range	0.0	0.4	0.7	1.2	1.5	1.8	2.1	2.5	2.8	3.1	3.8	3.8	4.1	4.4	4.8	5.1	5.4	5.7	6.1	6.4	6.7
Buffalo Grass Sharps Improved (Pounds per Acre)																					
High Range	0	0	0	22	52	76	106	130	159	185	213	241	259	293	321	352	371	395	417	430	434
Low Range	0	0	0	13	21	29	38	46	56	65	73	83	92	99	109	118	127	134	143	147	150
Buffalo Grass Sharps Improved (Pounds per 1000 Square Feet)																					
High Range	0.0	0	0	0.5	1.2	1.7	2.4	3	3.6	4.2	4.9	5.5	6.2	6.7	7.4	8.1	8.5	9.1	9.6	9.9	10
Low Range	0.0	0	0	0.30	0.5	0.7	0.9	1.1	1.3	1.5	1.7	1.9	2.1	2.3	2.5	2.7	2.9	3.1	3.3	3.4	3.5
Clover - Red (Pounds per Acre)																					
High Range	0	77	143	202	263	321	380	438	499	557	616	676	734	793	852	913	971	1030	190	1149	1207
Low Range	0	24	45	64	83	102	120	139	158	177	195	214	233	251	270	289	308	326	346	364	383
Clover - Red (Pounds per 1000 Square Feet)																					
High Range	0.0	1.8	3.3	4.6	6	7.4	8.7	1.1	11.5	12.8	14.2	15.5	16.9	18.2	19.6	21	22.3	23.7	25.1	26.4	27.8
Low Range	0.0	0.6	1	1.5	1.9	2.3	2.8	3.2	3.6	4.1	4.5	4.9	5.4	5.8	6.2	6.6	7.1	7.5	7.9	8.4	8.8
Clover - White (Pounds per Acre)																					
High Range	0	77	151	224	297	372	444	517	592	664	737	812	884	957	1032	1104	1177	1252	1324	1397	1472
Low Range	0	24	48	71	94	118	141	164	187	211	234	257	280	303	327	350	373	397	420	443	466
Clover - White (Pounds per 1000 Square Feet)																					
High Range	0.0	1.8	3.5	5.2	6.8	8.5	10.2	11.9	13.6	15.3	16.9	18.7	20.3	22	23.7	25.4	27.1	28.8	30.4	32.1	33.8
Low Range	0.0	0.6	1.1	1.6	2.2	2.7	3.2	3.8	4.3	4.8	5.4	5.9	6.4	7	7.5	8	8.6	9.1	9.6	10.2	10.7
Fescue - Fine Blade, Turf Type (Pounds per Acre)																					
High Range	0	20	46	75	103	131	160	188	216	242	271	299	327	355	384	412	440	468	497	525	553
Low Range	0	6	15	24	33	42	51	60	69	77	86	95	104	113	122	131	140	148	157	166	175
Fescue - Fine Blade, Turf Type (Pounds per 1000 Square Feet)																					
High Range	0.0	0.5	1.1	1.7	2.4	3	3.7	4.3	5	5.6	6.2	6.9	7.5	8.2	8.8	9.5	10.1	10.8	11.4	12.1	12.7
Low Range	0.0	0.1	0.3	0.5	0.7	1	1.2	1.4	1.6	1.8	2	2.2	2.4	2.6	2.8	3	3.2	3.4	3.6	3.8	4
Fescue K-31(Pounds per Acre)																					
High Range	0	0	21	50	83	113	140	165	186	223	243	272	305	328	355	382	48	433	439	450	454
Low Range	0	0	6	15	26	35	44	51	58	69	76	84	95	102	110	118	127	134	136	140	141
Fescue K-31 (Pounds per 1000 Square Feet)																					
High Range	0.0	0.0	0.5	1.1	1.9	2.6	3.2	3.8	4.3	5.1	5.6	6.3	7	7.5	8.2	8.8	9.4	10	10.1	10.3	10.4
Low Range	0.0	0.0	0.1	0.4	0.6	0.8	1	1.2	1.3	1.6	1.7	1.9	2.2	2.3	2.5	2.7	2.9	3.1	3.1	3.2	3.2
Kentucky Blue Grass (Pounds per Acre)																					
High Range	0	23	48	73	103	125	155	178	205	227	250	274	293	322	334	365	387	406	426	442	455
Low Range	0	8	16	24	34	41	51	58	67	74	82	90	96	106	109	119	127	133	140	145	149
Kentucky Blue Grass (Pounds per 1000 Square Feet)																					
High Range	0.0	0.5	1.1	1.7	2.4	2.9	3.6	4.1	4.7	5.2	5.7	6.3	6.7	7.4	7.7	8.4	8.9	9.3	9.8	10.1	10.5
Low Range	0.0	0.2	0.4	0.5	0.8	0.9	1.2	1.3	1.5	1.7	1.9	2.1	2.2	2.4	2.5	2.7	2.9	3.1	3.2	3.3	3.4

Cup Setting	0	5	10	15	20	25	30	35	40	45	50	55	60	65	70	75	80	85	90	95	100
Lovegrass - Sand (Pounds per Acre)																					
High Range	0	89	140	191	242	293	343	394	445	496	547	598	649	700	751	802	852	925	977	1029	1081
Low Range	0	28	44	61	77	93	109	125	141	157	173	189	206	222	238	254	270	286	302	319	335
Lovegrass - Sand (Pounds per 1000 Square Feet)																					
High Range	0.0	2	3.2	4.4	5.6	6.7	7.9	9.1	10.2	11.4	12.6	13.7	14.9	16.1	17.3	18.4	19.6	21.3	22.5	23.7	24.9
Low Range	0.0	0.6	1	1.4	1.8	2.1	2.5	2.9	3.2	3.6	4	4.4	4.7	5.1	5.5	5.8	6.2	6.6	6.9	7.3	7.7
Lovegrass - Weeping (Pounds per Acre)																					
High Range	0	109	176	226	287	343	396	448	501	553	606	658	711	763	816	868	921	973	1026	1078	1133
Low Range	0	35	56	72	91	109	125	142	159	175	192	209	225	242	259	275	292	308	325	342	359
Lovegrass - Weeping (Pounds per 1000 Square Feet)																					
High Range	0.0	2.5	4	5.2	6.6	7.9	9.1	10.3	11.5	12.7	13.9	15.1	16.3	17.5	18.7	20	21.2	22.4	23.6	24.8	26
Low Range	0.0	0.8	1.3	1.6	2.1	2.5	2.9	3.3	3.6	4	4.4	4.8	5.2	5.6	5.9	6.3	6.7	7.1	7.5	7.8	8.2
Orchard Grass (Pounds per Acre)																					
High Range	0	4	6	10	15	20	27	34	41	49	58	66	75	85	94	103	112	121	130	138	146
Low Range	0	1	2	3	5	7	9	12	15	18	22	25	29	33	36	40	44	48	51	55	58
Orchard Grass (Pounds per 1000 Square Feet)																					
High Range	0.0	0.1	0.1	0.2	0.3	0.5	0.6	0.8	0.9	1.1	1.3	1.5	1.7	1.9	2.2	2.4	2.6	2.8	3.0	3.2	3.3
Low Range	0.0	0.0	0.0	0.1	0.1	0.2	0.2	0.3	0.3	0.4	0.5	0.6	0.7	0.7	0.8	0.9	1.0	1.1	1.2	1.3	1.3
Rye Grass - Annual (Pounds per Acre)																					
High Range	0	21	59	95	131	168	204	242	279	315	351	388	426	462	499	535	573	610	646	682	719
Low Range	0	7	19	30	42	53	65	77	88	100	111	123	135	147	158	170	182	193	205	216	228
Rye Grass - Annual (Pounds per 1000 Square Feet)																					
High Range	0.0	0.5	1.3	2.2	3	3.9	4.7	5.6	6.4	7.2	8.1	8.9	9.8	10.6	11.5	12.3	13.2	14	14.9	15.7	16.5
Low Range	0.0	0.2	0.4	0.7	1	1.2	1.5	1.8	2	2.3	2.6	2.8	3.1	3.4	3.6	3.9	4.2	4.4	4.7	5	5.2
Rye Grass - Perennial (Pounds per Acre)																					
High Range	0	36	77	115	156	196	234	275	315	353	394	434	475	513	553	594	632	672	713	751	791
Low Range	0	12	24	37	49	62	74	87	100	112	125	138	150	163	175	188	200	213	226	238	251
Rye Grass - Perennial (Pounds per 1000 Square Feet)																					
High Range	0.0	0.8	1.8	2.6	3.6	4.5	5.4	6.2	7.2	8.1	9	10	10.9	11.8	12.7	13.6	14.5	15.5	16.4	17.3	18.2
Low Range	0.0	0.3	0.6	0.8	1.1	1.4	1.7	2	2.3	2.6	2.9	3.2	3.5	3.7	4	4.3	4.6	4.9	5.2	5.5	5.8
Sudan Grass (Pounds per Acre)																					
High Range	0	35	68	103	141	179	220	262	306	352	398	446	495	545	596	648	701	754	808	862	916
Low Range	0	18	28	41	55	71	89	107	127	147	168	189	210	231	252	271	290	308	325	339	352
Sudan Grass (Pounds per 1000 Square Feet)																					
High Range	0.0	0.8	1.6	2.4	3.2	4.1	5.1	6.0	7.0	8.1	9.1	10.2	11.4	12.5	13.7	14.9	16.1	17.3	18.5	19.8	21.0
Low Range	0.0	0.4	0.6	0.9	1.3	1.6	2.0	2.5	2.9	3.4	3.9	4.3	4.8	5.3	5.8	6.2	6.7	7.1	7.5	7.8	8.1
Vetch (Pounds per Acre)																					
High Range	0	78	135	191	245	302	358	415	471	525	582	638	695	749	805	862	918	973	1029	1089	1142
Low Range	0	21	38	56	73	90	108	125	142	159	177	194	211	228	246	263	280	298	315	333	350
Vetch (Pounds per 1000 Square Feet)																					
High Range	0.0	1.8	3.1	4.4	5.6	6.9	8.2	9.5	10.8	12.1	13.4	14.7	16	17.2	18.5	19.8	21.1	22.4	23.7	25.1	26.2
Low Range	0.0	0.5	0.9	1.3	1.7	2.1	2.5	2.9	3.3	3.7	4.1	4.5	4.9	5.2	5.6	6	6.4	6.9	7.2	7.6	8
Wheatgrass - Crested (Pounds per Acre)																					
High Range	0	22	36	51	67	81	95	111	125	139	153	170	184	198	214	228	242	258	273	287	301
Low Range	0	7	12	16	21	26	30	35	40	44	49	54	58	63	68	72	77	82	86	91	95
Wheatgrass - Crested (Pounds per 1000 Square Feet)																					
High Range	0.0	0.5	0.8	1.2	1.5	1.9	2.2	2.6	2.9	3.2	3.5	3.9	4.2	4.5	4.9	5.2	5.6	5.9	6.3	6.6	6.9
Low Range	0.0	0.2	0.3	0.4	0.5	0.6	0.7	0.8	0.9	1	1.1	1.2	1.3	1.4	1.6	1.7	1.8	1.9	2	2.1	2.2
Wheatgrass - Western (Pounds per Acre)																					
High Range	0	7	24	41	58	76	93	110	127	144	161	179	196	213	230	247	265	282	299	316	333
Low Range	0	2	8	13	19	24	29	35	4	46	51	57	62	67	73	78	84	89	95	100	106
Wheatgrass - Western (Pounds per 1000 Square Feet)																					
High Range	0.0	0.2	0.5	0.9	1.3	1.7	2.1	2.5	2.9	3.3	3.7	4.1	4.5	4.9	5.3	5.7	6.1	6.5	6.9	7.3	7.7
Low Range	0.0	0	0.2	0.3	0.4	0.5	0.7	0.8	0.9	1	1.2	1.3	1.4	1.5	1.7	1.8	1.9	2.1	2.2	2.3	2.4

Small Seeds Attachment Seed Rate Chart

(Refer to Page 30)

Seed Rate Charts (Metric)

Cup Setting	0	5	10	15	20	25	30	35	40	45	50	55	60	65	70	75	80	85	90	95	100
Alfalfa (Kilograms per Hectare)																					
High Range	0	60	140	222	301	382	461	543	621	700	782	860	942	1021	1102	1181	1263	1341	1421	1503	1581
Low Range	0	19	45	70	95	121	147	172	197	222	247	273	299	323	349	375	41	425	450	475	501
Alfalfa (Kilograms per 1000 Square Meters)																					
High Range	0	6	14	22	30	38	45	54	62	70	79	86	95	103	110	119	126	135	143	151	159
Low Range	0	2	4	7	10	12	15	17	20	22	25	27	30	32	35	38	40	42	45	48	50
Bent Grass (Kilograms per Hectare)																					
High Range	0	41	90	129	170	207	230	267	296	328	365	401	425	462	491	522	558	591	620	656	693
Low Range	0	19	32	47	60	74	86	100	111	123	136	147	157	167	178	188	196	206	214	222	229
Bent Grass (Kilograms per 1000 Square Meters)																					
High Range	0	4	9	13	17	21	23	27	30	33	37	40	42	46	49	56	59	62	62	66	69
Low Range	0	2	3	5	6	7	9	10	11	12	14	15	16	17	18	19	20	21	21	22	23
Bermuda Unhulled (Kilograms per Hectare)																					
High Range	0	68	113	180	230	280	330	382	432	481	531	583	632	682	732	784	834	883	933	985	1035
Low Range	0	21	36	57	73	88	104	121	136	152	168	185	200	216	232	248	264	280	295	312	328
Bermuda Unhulled (Kilograms per 1000 Square Meters)																					
High Range	0	7	11	18	23	28	33	38	43	48	53	59	63	68	73	79	83	88	94	99	104
Low Range	0	2	3	6	7	9	10	12	14	15	19	19	20	21	23	25	26	28	30	31	33
Buffalo Grass (Kilograms per Hectare)																					
High Range	0	0	0	25	58	85	119	145	178	207	238	270	290	328	359	394	415	442	467	481	486
Low Range	0	0	0	15	23	32	43	51	63	73	82	93	103	111	122	132	142	150	160	164	168
Buffalo Grass (Kilograms per 1000 Square Meters)																					
High Range	0	0	0	2	6	8	12	15	18	21	24	27	30	33	36	40	42	44	47	48	49
Low Range	0	0	0	1	2	3	4	5	6	7	8	9	10	11	12	13	14	15	16	17	17
Clover - Red (Kilograms per Hectare)																					
High Range	0	86	160	226	294	359	425	490	558	623	689	756	821	887	953	1021	1086	1152	1219	1286	1350
Low Range	0	27	50	72	93	114	134	156	177	198	218	239	261	281	302	323	345	365	387	407	429
Clover - Red (Kilograms per 1000 Square Meters)																					
High Range	0	9	16	22	29	36	42	49	56	62	69	76	83	89	96	103	109	116	123	129	136
Low Range	0	3	5	7	9	11	14	16	18	20	22	24	26	28	30	32	35	37	39	41	43
Clover - White (Kilograms per Hectare)																					
High Range	0	86	169	251	332	416	497	578	662	743	825	908	989	1071	1155	1235	1317	1401	1481	1563	1647
Low Range	0	27	54	79	105	132	158	183	209	236	262	288	313	339	366	392	417	444	470	496	521
Clover - White (Kilograms per 1000 Square Meters)																					
High Range	0	9	17	25	33	42	50	58	66	75	83	91	99	107	116	124	132	141	148	157	165
Low Range	0	3	5	8	11	13	16	19	21	23	26	29	31	34	37	39	42	44	47	50	52
Fescue - Fine Blade, Turf Type (Kilograms per Hectare)																					
High Range	0	22	51	84	115	147	179	210	242	271	303	335	366	397	430	461	492	524	556	587	619
Low Range	0	7	17	27	37	47	57	67	77	86	96	106	116	126	136	147	157	166	176	186	196
Fescue - Fine Blade, Turf Type (Kilograms per 1000 Square Meters)																					
High Range	0	2	5	8	12	15	18	21	24	27	30	34	37	40	43	46	49	53	56	59	62
Low Range	0	0	1	2	3	5	6	7	8	9	10	11	12	13	14	15	16	17	18	19	20
Fescue K-31(Kilograms per Hectare)																					
High Range	0	0	23	56	93	126	157	185	208	249	272	304	341	367	397	427	456	484	491	503	508
Low Range	0	0	7	17	29	39	49	57	65	77	85	94	106	114	123	132	142	150	152	157	158
Fescue K-31 (Kilograms per 1000 Square Meters)																					
High Range	0	0	2	5	9	13	16	19	21	25	27	31	34	37	40	43	46	49	49	50	51
Low Range	0	0	0	5	3	4	5	6	6	8	8	9	11	11	12	13	14	15	15	16	16
Kentucky Blue Grass (Kilograms per Hectare)																					
High Range	0	26	54	82	115	140	173	199	229	254	280	307	328	360	374	408	433	454	477	495	509
Low Range	0	9	18	27	38	46	57	65	75	83	92	101	107	119	122	133	142	149	157	162	167
Kentucky Blue Grass (Kilograms per 1000 Square Meters)																					
High Range	0	2	5	8	12	14	18	20	23	25	28	31	33	36	38	41	43	45	48	49	51
Low Range	0	1	2	2	4	4	6	6	7	8	9	10	11	12	12	13	14	15	16	16	17

Cup Setting	0	5	10	15	20	25	30	35	40	45	50	55	60	65	70	75	80	85	90	95	100
Lovegrass - Sand (Kilograms per Hectare)																					
High Range	0	100	157	214	271	328	384	441	498	555	612	669	726	783	840	897	953	1035	1093	151	1209
Low Range	0	31	49	68	86	104	122	140	158	176	194	211	230	248	266	284	302	320	338	357	375
Lovegrass - Sand (Kilograms per 1000 Square Meters)																					
High Range	0	10	16	21	27	33	39	44	50	56	62	67	73	79	84	90	96	104	110	116	122
Low Range	0	3	5	7	9	10	12	14	16	18	20	21	23	25	27	28	30	32	34	36	38
Lovegrass - Weeping (Kilograms per Hectare)																					
High Range	0	122	197	253	321	384	443	501	561	619	678	736	795	854	913	971	1030	1089	1148	1206	1268
Low Range	0	39	63	81	102	122	140	159	178	196	215	234	252	271	290	308	327	345	364	383	402
Lovegrass - Weeping (Kilograms per 1000 Square Meters)																					
High Range	0	12	20	25	32	39	44	50	56	62	68	74	80	85	91	98	104	109	15	121	127
Low Range	0	4	6	8	10	12	14	16	18	20	21	23	25	27	29	31	33	35	37	38	40
Orchard Grass (Kilograms per Hectare)																					
High Range	0	4	7	11	17	23	30	38	46	55	65	74	84	95	105	115	126	136	145	155	164
Low Range	0	1	2	4	5	8	10	14	17	20	24	28	32	37	41	45	49	53	57	61	65
Orchard Grass (Kilograms per 1000 Square Meters)																					
High Range	0	0	1	1	2	2	3	4	5	6	6	7	8	9	11	12	13	14	15	15	16
Low Range	0	0	0	0	1	1	1	1	2	2	2	3	3	4	4	5	5	5	6	6	6
Rye Grass - Annual (Kilograms per Hectare)																					
High Range	0	23	66	106	147	188	228	271	312	352	393	434	477	517	558	599	641	682	723	763	804
Low Range	0	8	21	34	47	59	73	86	98	112	124	138	151	164	177	190	204	216	229	242	255
Rye Grass - Annual (Kilograms per 1000 Square Meters)																					
High Range	0	2	6	11	15	19	23	27	31	35	40	43	48	52	56	60	64	68	73	77	81
Low Range	0	1	2	3	5	6	7	9	10	11	13	14	15	17	18	19	21	21	23	24	25
Rye Grass - Perennial (Kilograms per Hectare)																					
High Range	0	40	86	129	175	219	262	308	352	395	441	486	531	574	619	665	707	752	798	840	885
Low Range	0	13	27	41	55	69	83	97	112	125	140	154	168	182	196	210	224	238	253	266	281
Rye Grass - Perennial (Kilograms per 1000 Square Meters)																					
High Range	0	4	9	13	18	22	26	30	35	40	44	49	53	58	62	66	71	76	80	84	89
Low Range	0	1	3	4	5	7	8	10	11	13	14	16	17	18	20	21	22	24	25	27	28
Sudan Grass (Kilograms per Hectare)																					
High Range	0	39	77	116	157	201	247	294	343	394	446	500	555	611	668	726	785	845	905	966	1027
Low Range	0	20	32	46	62	80	99	120	142	165	188	212	236	259	282	304	325	345	364	380	395
Sudan Grass (Kilograms per 1000 Square Meters)																					
High Range	0	4	8	12	16	20	25	29	34	39	45	50	56	61	67	73	79	84	91	97	103
Low Range	0	2	3	5	6	8	10	12	14	16	19	21	24	26	28	30	33	35	36	38	39
Vetch (Kilograms per Hectare)																					
High Range	0	87	151	214	274	338	401	464	527	587	651	714	778	838	901	964	1027	1089	1151	1218	1278
Low Range	0	23	43	63	82	101	121	140	159	178	198	217	236	255	275	294	313	333	352	373	392
Vetch (Kilograms per 1000 Square Meters)																					
High Range	0	9	15	21	27	34	40	46	53	59	65	72	78	84	90	97	103	109	116	123	128
Low Range	0	2	4	6	8	10	12	14	16	18	20	22	24	25	27	29	31	34	35	37	39
Wheatgrass - Crested (Kilograms per Hectare)																					
High Range	0	25	40	57	75	91	106	124	140	156	171	190	206	222	239	255	271	289	305	321	337
Low Range	0	8	13	18	23	29	34	39	45	49	55	60	65	70	76	81	86	92	96	102	106
Wheatgrass - Crested (Kilograms per 1000 Square Meters)																					
High Range	0	2	4	6	7	9	11	13	14	16	17	19	21	22	24	25	27	29	31	32	34
Low Range	0	1	1	2	2	3	3	4	4	5	5	6	6	7	8	8	9	9	10	10	11
Wheatgrass - Western (Kilograms per Hectare)																					
High Range	0	8	27	46	65	85	104	123	142	161	180	200	219	238	257	276	296	316	335	354	373
Low Range	0	2	9	15	21	27	32	39	45	51	57	64	69	75	82	87	94	100	106	112	119
Wheatgrass - Western (Kilograms per 1000 Square Meters)																					
High Range	0	1	2	4	6	8	10	12	14	16	18	20	22	24	26	28	30	32	34	36	38
Low Range	0	0	1	1	2	2	3	4	4	5	6	6	7	7	8	9	9	10	11	11	12

Small Seeds Attachment Seed Rate Chart

(Refer to Page 30)

Rotary Cutting Depth Adjustment

There are three options for setting your cutting depth. They are gauge wheel drive, rear roller drive and rear roller drive with front roller. The option you use is determined by your Overseeder drive type.

Gauge Wheel Drive

WARNING

Before making adjustments on the Overseeder, shut off tractor, disengage PTO, wait for all moving parts to stop and lock brakes before dismounting tractor. Be sure Overseeder is securely supported on safe supporting stands.

NOTE: The cutting depth of the knives is set by adjusting the height of the gauge wheels.

Refer to Figure 3-4:

1. Start by adjusting the left hand gauge wheel first. Loosen the jam nut (#1) and back it off.
2. Rotate turnbuckle (#2) to shorten or lengthen it to achieve proper depth, dimension (A).
3. Retighten jam nut (#1) to lock turnbuckle in place.

Refer to Figure 3-5:

4. Adjust right hand gauge wheel next. Lower Overseeder to the ground and support the right gauge wheel tire with a block beneath it, thus causing the spring loaded gauge wheel link to bottom out.
5. Loosen jam nut (#3) and back it off.
6. Turn adjuster nut (#4) to shorten or lengthen spring loaded link (#5).
7. Dimension (B) should be the same on both right and left hand gauge wheels to achieve the same cutting depth (A) at both ends of the Overseeder.
8. Adjust 3-point top center link at the tractor to re-level the Overseeder.

NOTE: Dimension (B) on the right hand gauge wheel can only be checked when the stop washer (#6) is bottomed on the spring tube (#7) as shown.

Rear Roller Drive

Refer to Figure 3-6:

NOTE: The cutting depth of the knives is set by raising or lowering the tractor's lower 3-point arms.

1. Raise or lower the lower arms on the tractor 3-point hitch until the desired cutting depth is obtained.
2. Adjust rigid links as necessary by loosening jam nuts (#1) and turning the turnbuckles (#2) to get a firm pressing action on the packer wheels.
3. Retighten jam nuts making sure that dimension (A) is equal in both sides.

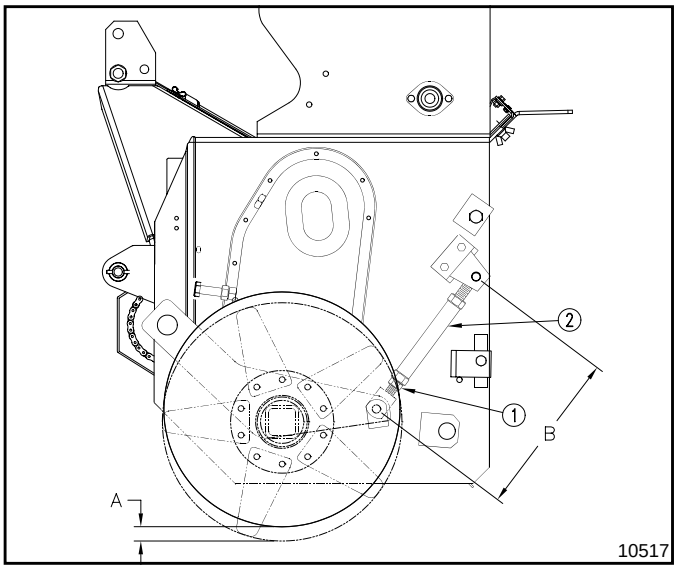

Left Hand Gauge Wheel
Figure 3-4

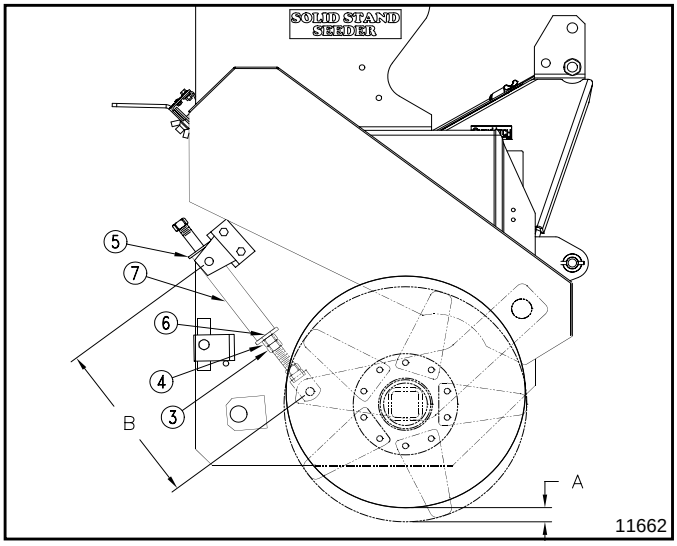

Right Hand Gauge Wheel
Figure 3-5

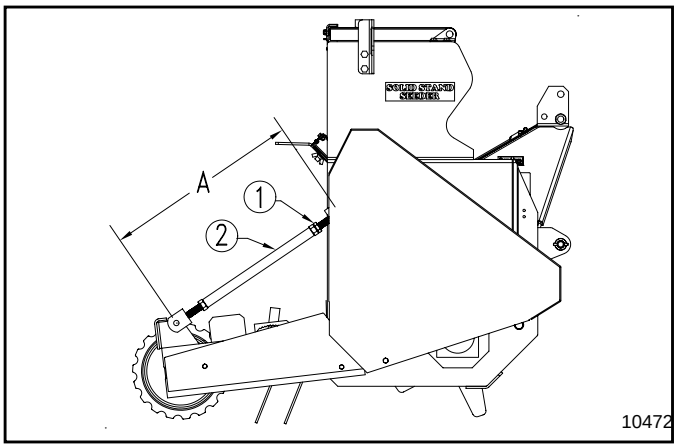

Rear Roller Drive Without Front Roller
Figure 3-6

Rear Roller Drive With Front Roller

Cutting Depth Adjustment

IMPORTANT: With this option, the cutting depth of the knives is set by the front roller. The lower arms on the tractor's 3-point hitch should be in float position.

Refer to Figure 3-7:

1. Adjust turnbuckles on the front roller as necessary by loosening jam nuts (#3) and turning turnbuckles (#4) to get proper cutting depth.
2. Retighten jam nuts making sure dimension (B) is equal on both sides.

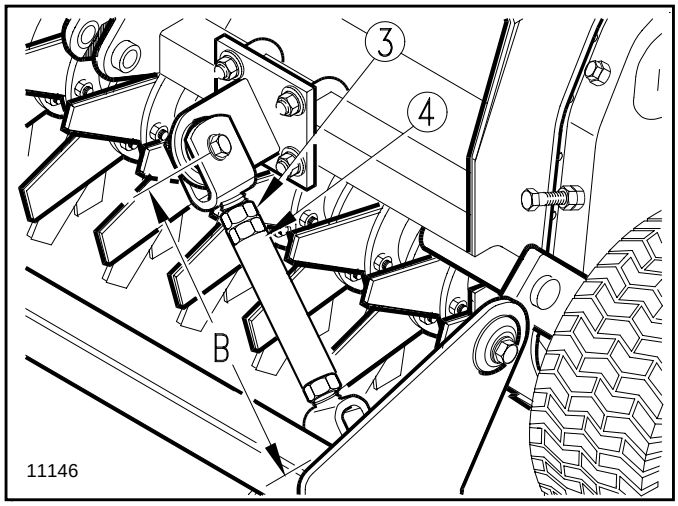

Front Roller Turnbuckle
Figure 3-7

Refer to Figure 3-8:

3. Level Overseeder from front to rear by loosening jam nuts (#1) and adjusting rear roller turnbuckles (#2).
4. Retighten jam nuts making sure dimension (A) is equal on both sides.
5. Recheck knife depth to make sure no additional adjustments are needed to the front roller and rear roller turnbuckles.

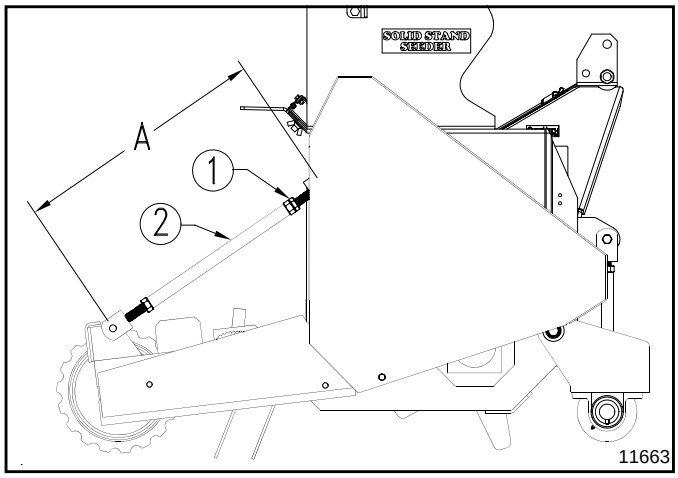

Rear Roller Drive w/Front Roller
Figure 3-8

Floating Top Link Adjustment

Refer to Figure 3-8:

Floating top link is used only when the seeder set-up is rear roller drive with front roller support.

Refer to Figure 3-9:

Set floating top link 16" from center line of top center link hitch hole to center line of lower lift arm hitch holes by adjusting length of tractor's top center link.

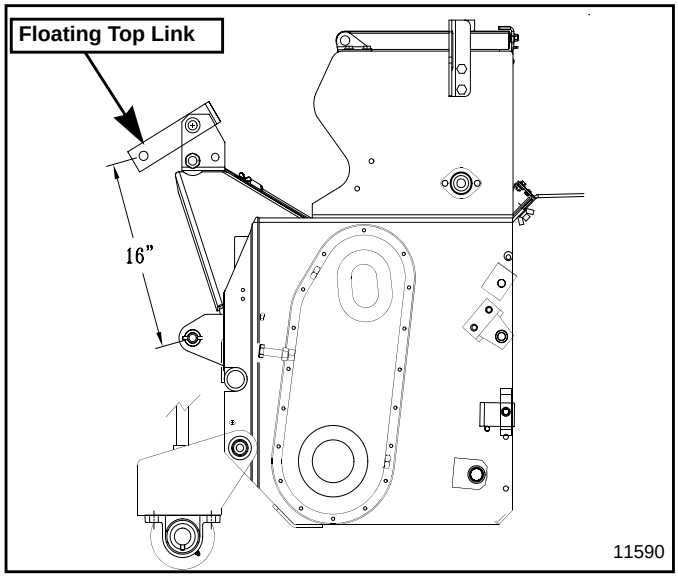

Floating Top Link
Figure 3-9

Rear Arm Length Adjustment

The rear roller is normally mounted to the short arm holes to keep tractor ballast weight to a minimum. Use long arm hole setting only if optional rear tine attachment is included.

1. Support Overseeder with an overhead hoist to adjust rear roller for short arm or long arm use.

Refer to Figure 1-8 on page 11:

2. If Overseeder is equipped with rear roller drive, remove rear chain guard (#6), front chain guard (#7), right and left solid links (#1), rear roller drive chain and drive sprocket (#13).

Refer to Figure 3-10:

3. Remove roller scraper (#8) by removing 3/8” x 1" bolts (#10), flat washers (#9), lock washers (#11) and nuts (#12) from both arms (#1).

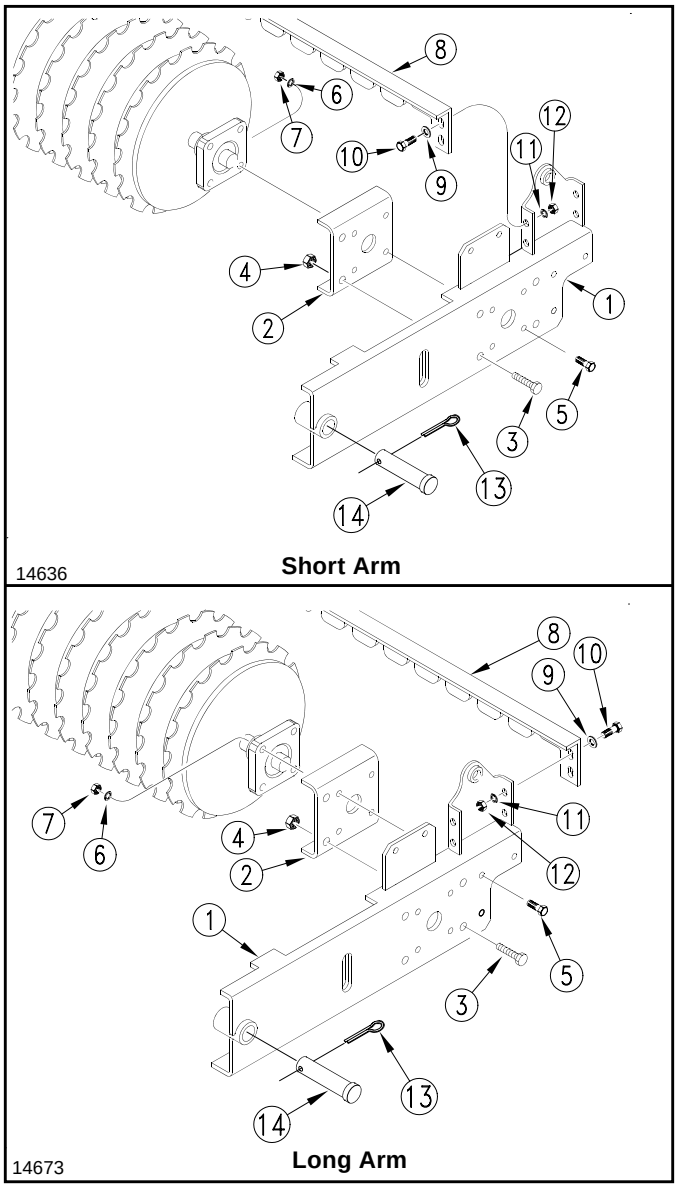

Rear Roller Adjustment
Figure 3-10

4. Remove both rear roller arms (#1) from Overseeder frame by removing cotter pin (#13) and 1” clevis pin (#14).
5. Remove rear roller adjustment bracket (#2) from both rear roller arms by removing 1/2” x 1 1/4” long bolts (#3) and 1/2” flange nuts (#4).
6. Remove from each roller arm 3/8” x 1 1/2” bolts (#5), lock washer (#6) and hex nut (#7). Do not remove bearings from rear roller shaft.
7. The rear roller should be free to move now. Reposition rear roller adjustment bracket (#2) to the long or short arm location on roller arms (#1) and reassemble in reverse order.

NOTE: For long arm assembly, you may need to add 3 or more flat washers between the bottom rear bolt (#5) and rear roller adjustment bracket (#2).

Tine Attachment (Optional)

Refer to Figure 3-11:

To adjust height of tines:

1. Loosen 3/4" bolt (#1) on outside of right hand and left hand roller packer support channels (#2).
2. Raise or lower tine assembly (#3) and retighten 3/4" bolt (#1).

To adjust angle of tines:

3. Loosen 1/2" nut on carriage bolts (#4) and push head of carriage bolt from its notch (#6) on each side of the tine assembly.
4. Move handle (#5) forward or backward to the desired tine angle.
5. Make sure carriage bolts (#4) are nested in the same notch (#6) on both sides and retighten carriage bolt nuts.

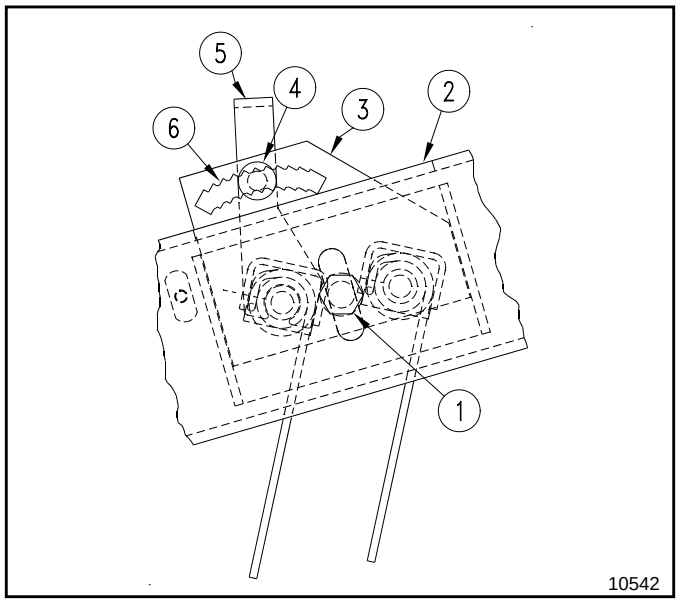

Torsion Tine Height & Angle Adjustment
Figure 3-11

Slit Seeder Attachment (Optional)

Refer to Figure 3-12:

The initial mid-range location of the slit seeder should be adequate for most overseeding operations. Most important is to ensure proper adjustment and leveling of the Overseeder.

1. Loosen four 3/8" hex head cap screws (#1) (2 per side) and adjust slit seeder up or down to achieve 1/2" clearance between seed funnel and ground as shown.
2. Retighten 3/8"-16 x 2 1/2 GR5 hex head cap screws to the proper torque.
3. Operator can adjust slit seeder attachment up and down to suit.

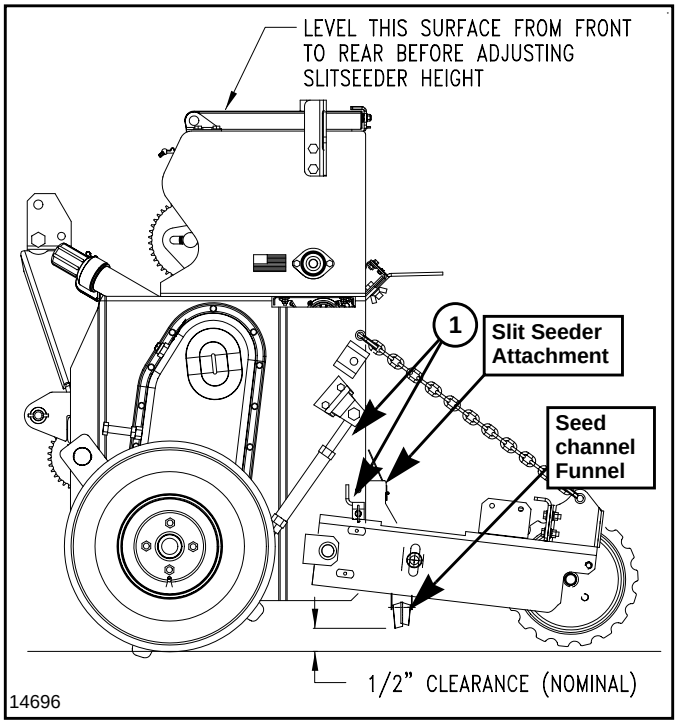

Slit Seeder Adjustment
Figure 3-12

Feed Cup Drive System Adjustment

Your Overseeder uses standard no. 40 roller chain throughout its feed cup drive system. The drive system is simple and designed for low maintenance.

1. Check drive idler to insure that it is taking up any excess chain slack.
2. Check each chain to insure that it is not over-tight.
3. Annually clean and lubricate chain with chain oil.

Rotor Drive Chain Adjustment

Refer to Figure 3-13:

Drive chain tension can be easily adjusted by using the special chain tightener shown in Figure 3-13.
Should backlash occur:

1. Loosen lock nut and turn bolt clockwise as indicated by the arrow until idler arm is firm against chain.
2. Then back bolt off counterclockwise 1/4 turn.
3. Re-lock lock nut while holding head of bolt in place.

NOTE: Excessive sprocket and chain wear will result if chain is overtightened.

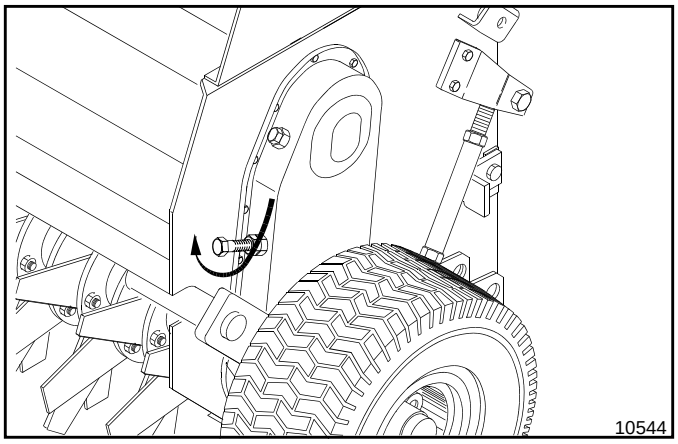

Rotor Drive Chain Adjustment
Figure 3-13

Small Seeds Attachment (Optional)

NOTE: Seeding rates will vary greatly with variations in sizes of the seeds. Although the seeding rates listed in this manual are based on an average seed size, we recommend that you test and adjust your Overseeder using the procedures listed below to help insure an accurate seeding rate.

NOTE: There is no “range” associated with Small Grass Seeds drive. If the drive is set-up correctly, the Small Grass Seeds box will turn the same speed regardless of whether the main seed box is set for high or low range.

1. Use seed rate charts on Page 30 to determine seeding rate for the seed you will be planting.

Refer to Figure 3-15 & Figure 3-16 on page 29:

2. Determine which range and drive type the main seed box is in and then check to make sure the Small Grass Seeds box drive train is set-up correctly.

Refer to Figure 3-14:

3. If Small grass Seeds drive train is incorrect, change sprockets (#4 & #8) as follows. Skip to step 4 if drive train is correct.

NOTE: Do not change cup drive sprocket (#4) if Overseeder serial number is below 124,696.

   a. Remove chain guard.
   b. Loosen idler plates (#1) and remove roller chains.
   c. Remove 1/4” x 1 3/4” long bolt (#2) and 1/4” lock nut (#3). Flip cup drive sprocket (#4) to desired drive type. Reassemble sprocket.
   d. Remove 5/8” nut (#5), 5/8” lock washer (#6) and 1” OD x 1/4” long spacer (#7).
   e. Flip double sprocket (#8) to desired drive type. Reassemble sprocket.
   f. Install chains and adjust idler plates (#1) for chain tightness.
   g. Reinstall chain guard.

IMPORTANT: Use seed rate charts as a guide. There are many factors which will affect seeding rates: seed treatment, weight of seed, surface condition of seed, tire pressure, tire configuration and tire or rear roller slippage. Minor adjustments may be needed to compensate for these factors.

4. See Important Note above. Locate seed rate adjustment lever at rear of seeder and move it to indicator number obtained from the seed rate charts. For best results, first move adjustment lever all the way to the left. Then move lever to desired setting, moving from a lower to a higher number.
   - Increase seed rate if seed is lighter than average.
   - Decrease seed rate if seed is heavier than average.

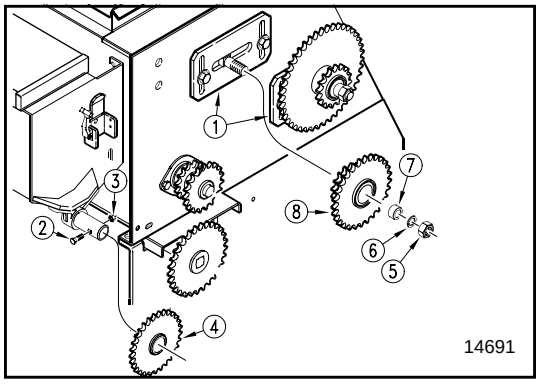

Small Seeds Drive Adjustment
Figure 3-14

5. Complete the following procedure to calibrate dispersal rate for your specific seed.
   a. Place several pounds of seed over three of the seed cups at the outboard end of the Overseeder. **Do not** allow any of the seed to reach other cups.
   b. Pull the seed tubes out of these three drops.
   c. Support drive unit off the ground as follows:
      - **Gauge wheel drive units**: Raise and support drive tire (right tire) off the ground using a jack.
      - **Rear roller drive units**: Raise and support rear roller off the ground using a jack.
   d. Rotate tire or rear roller to make sure drive system is working properly and that the feed cups are free from foreign matter.
   e. Place a container under the three seed tubes to gather seed as it is metered.
   f. Rotate gauge wheel or rear roller the number of rotations noted in the table below. Be sure to check the three feed cups to make sure each cup has plenty of seed coming into it.

Number of Gauge Wheel & Rear Roller Rotations

Coverage=	1000 Sq. Ft.		1/10 ACRE	
Model No	Wheel	Roller	Wheel	Roller
OS1548	52	80	228	347
OS1572	37	56	161	246

*** Seed rates listed in charts for gauge wheel units are based on Overseeder having 18 x 8.50 x 8 turf tires with 20 psi.**

   g. Weigh the seed which has been metered out and divide that weight by three to get the number of pounds metered by each seed cup. If your weight is in ounces, divide the weight by 48 to get the number of pounds metered by each seed cup.
   h. Next, multiply number of pounds per cup by number of cups on your seeder to arrive at total pounds per 1000 sq. ft. or pounds per 1/10 acre.
   i. If calculations are based on 1/10 acre, multiply total pounds by 10 to arrive at total pounds per acre. If this figure (total pounds) is different than desired, then readjust your seed cup adjustment lever accordingly.

6. You may want to repeat calibration procedure if results of your calibration vary greatly from suggested settings in the chart.

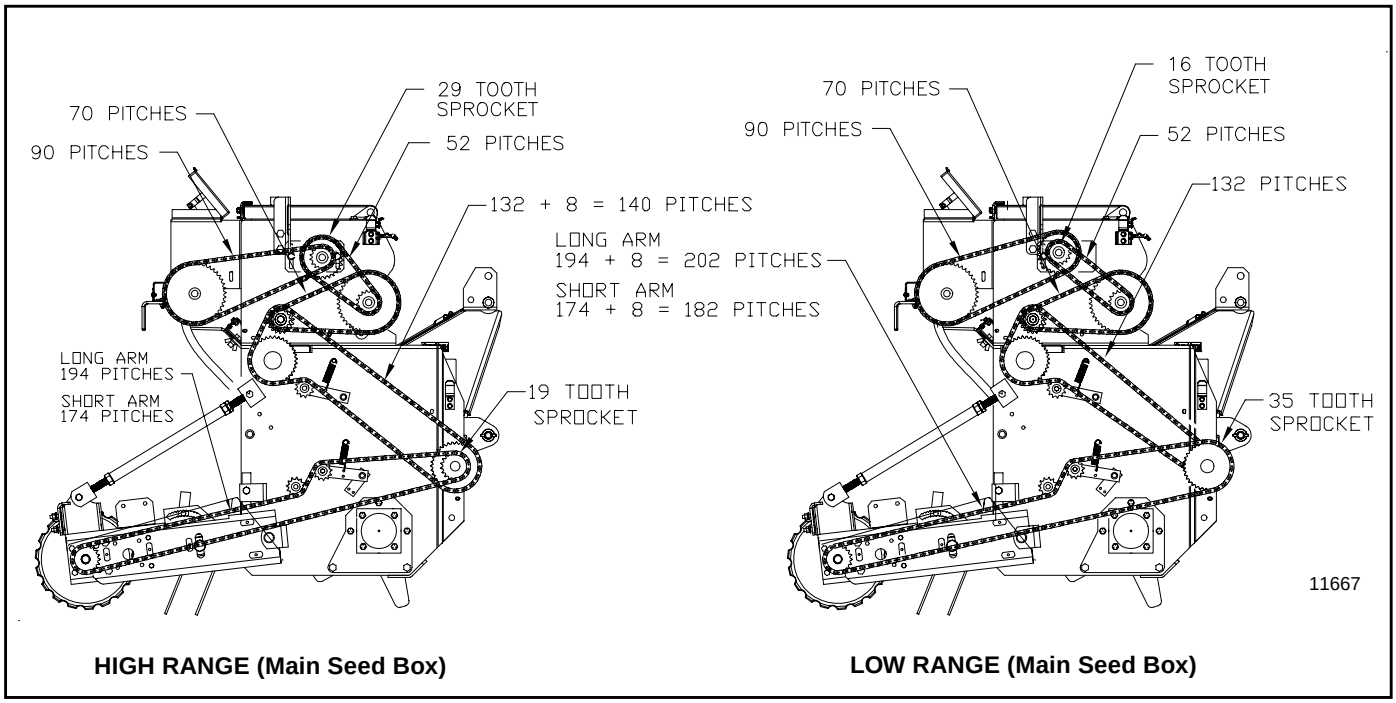

Rear Roller Drive (Small Seeds Sprocket Arrangement)
Figure 3-15

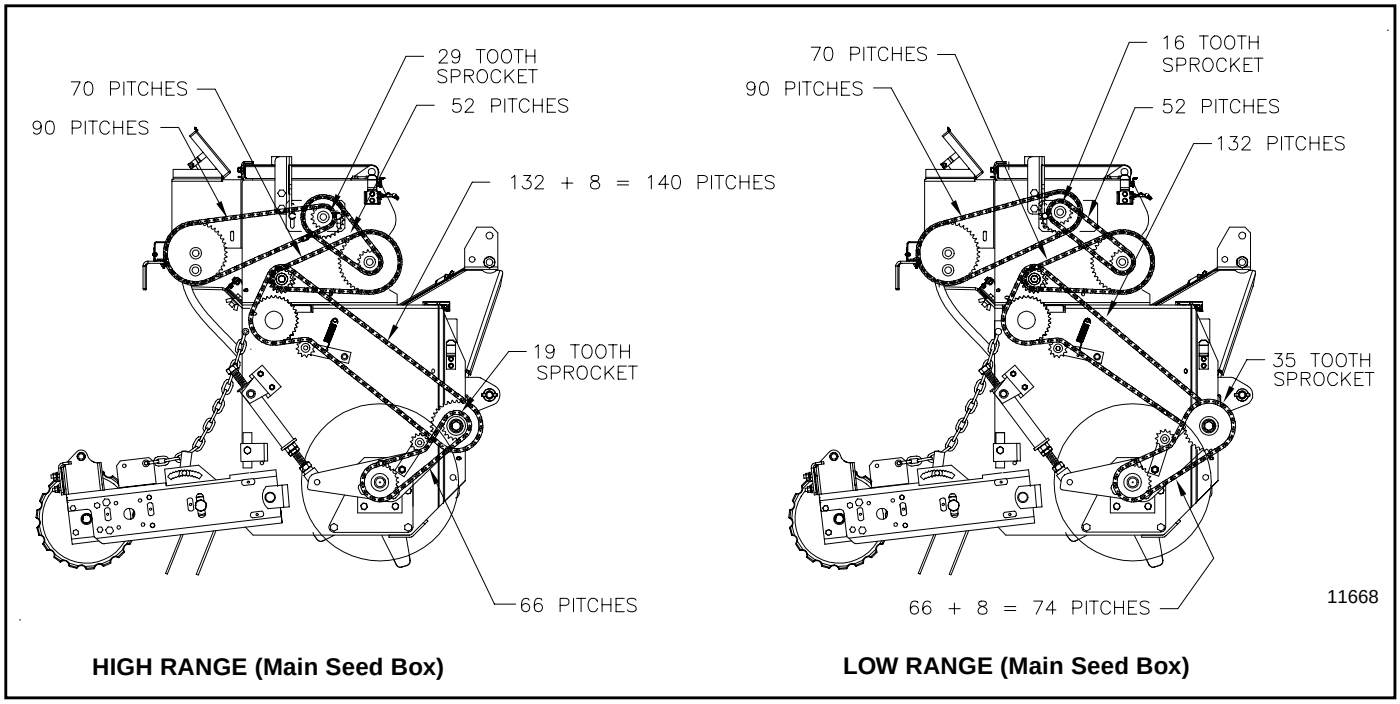

Gauge Wheel Drive (Small Seeds Sprocket Arrangement)
Figure 3-16

Small Seeds Seed Rate Chart (English)

(Pounds per 1000 square foot and Pounds per acre)

Cup Setting	0	5	10	15	20	25	30	35	40	45	50	55	60	65	70	75	80	85	90	95	100
Bent Grass (Pounds per Acre)																					
	0	0	0	1.3	2.4	3.2	4.0	5.1	6.1	6.8	7.8	8.2	8.8	9.3	9.8	10.	10.	11.	11.	11.	11.
Bent Grass (Pounds per 1000 Square Feet)																					
	0	0	0	0	0.1	0.1	0.1	0.1	0.1	0.2	0.2	0.2	0.2	0.2	0.2	0.2	0.2	0.3	0.3	0.3	0.3
Bermuda (Pounds per Acre)																					
	0	0	0.9	1.4	2.0	2.5	3.0	3.7	4.3	4.7	5.3	5.5	5.9	6.2	6.7	7.2	7.9	8.7	9.8	10.	11.
Bermuda (Pounds per 1000 Square Feet)																					
	0	0	0	0	0.1	0.1	0.1	0.1	0.1	0.1	0.1	0.1	0.1	0.1	0.2	0.2	0.2	0.2	0.2	0.2	0.3
Fescue (Pounds per Acre)																					
	0	0	0	1.1	1.7	2.4	3.1	4.0	5.1	6.1	6.9	7.7	8.4	9.0	9.5	10.	10.	10.	11.	11.	12.
Fescue (Pounds per 1000 Square Feet)																					
	0	0	0	0	0	0.1	0.1	0.1	0.1	0.1	0.2	0.2	0.2	0.2	0.2	0.2	0.2	0.2	0.3	0.3	0.3
Kentucky Blue Grass (Pounds per Acre)																					
	0	0	0.3	1.4	2.0	3.4	3.9	4.8	5.5	6.2	6.9	7.6	8.1	8.8	9.4	9.9	10.	11.	11.	12.	12.
Kentucky Blue Grass (Pounds per 1000 Square Feet)																					
	0	0	0	0	0	0.1	0.1	0.1	0.1	0.1	0.2	0.2	0.2	0.2	0.2	0.2	0.2	0.2	0.3	0.3	0.3
Rye (Pounds per Acre)																					
	0	0	0.4	2.0	3.8	5.9	7.8	9.4	11.	13.	14.	16.	18.	19.	21.	23.	24.	26.	28.	32.	37.
Rye (Pounds per 1000 Square Feet)																					
	0	0	0	0.1	0.1	0.1	0.2	0.2	0.3	0.3	0.3	0.4	0.4	0.4	0.5	0.5	0.6	0.6	0.6	0.7	0.9

NOTE: For gauge wheel units the seed rates listed in the chart are based on overseeders having 18 x 8.50 x 8 turf tires with 20 psi.

Maintenance

Proper servicing and adjustment is the key to the long life of any implement. With careful inspection and routine maintenance, you can avoid costly down time and repair.

1. After using your Overseeder for several hours, check all bolts to be sure they are tight.
2. Lubricate areas noted in the **"Lubrication"** section.
3. Adjust idlers to remove excess slack from chains. Clean and use chain lube on all roller chains as needed.
4. Feed cup drive sprocket should be oiled in its square bore. Move feed cup adjustment lever away from sprocket as far as possible in order to get oil back into square.
5. Always maintain proper air pressure in turf tires.
6. Replace any worn, damaged or illegible safety labels by obtaining new labels from your Land Pride Dealer.

Storage

Clean, inspect, service and make necessary repairs to the seeder when parking it for long periods and when parking it at the end of a working season. This will help ensure the seeder is ready for field use the next time you hook-up to it.

1. Completely clean the seed box of seed and other debri before storing.
2. Lubricate and adjust all roller chains and fittings.
3. Feed cup drive sprocket hub should be oiled in its square bore. Squirt oil on to the square feed cup shaft and move feed cup adjustment lever back and forth in order to get the oil back into the square bore. This is most important before putting the Overseeder in storage.
4. Store the Overseeder and its attachments inside if possible to extend the Overseeder's life.
5. When in storage, lower the Overseeder with rollers on a board or hard surface and adjust the parking stand to properly support the seeder.
6. Repaint parts where paint is worn or scratched to prevent rust.
7. Replace all damaged or missing decals.
8. Check knives for wear and replace if necessary.
9. Inspect Overseeder for loose, damaged or worn parts and adjust or replace as needed.
10. Drain gear case and chaincase oil. Drain oil in gear case by removing plug from the bottom side of the rotor housing. Drain oil in chaincase by removing oil level plug and fill plug.

Individual Knife Replacement

The following instructions are for replacing only a few bent and/or broken knives on the rotor without removing the rotor from the Overseeder frame. It is best to remove the rotor from the frame if replacing all knives. See "Rotor Maintenance" on this page to replace all knives.

Refer to Figure 4-1:

1. Remove two cap screws (#2) and locknuts (#3) from knife (#1) to be replaced.
2. Remove damaged knife and install new knife (#1) on same side of attaching flange as the damaged knife was using new 7/16" lock nuts (#3), Land Pride Part No. 803-108C. Torque nuts to 68 ft-lbs.

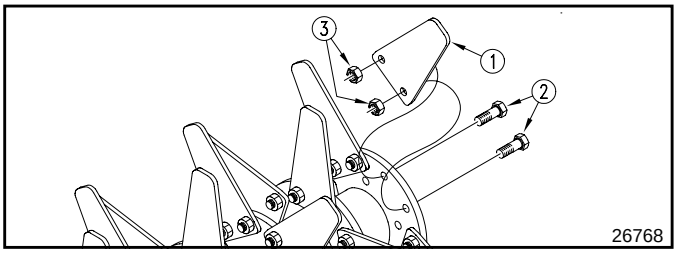

Individual Knife Replacement
Figure 4-1

Rotor Maintenance

It is best to remove the rotor knife assembly when replacing the complete set of knives, right hand bearing and/or bearing seal. Knives are worn out when they can not be set to penetrate the soil to your desired depth.

WARNING

Before making adjustments on the Overseeder, shut off the tractor, disengage PTO, wait for all moving parts to stop and lock brakes before dismounting tractor. Securely block Overseeder on safe supporting stands and disconnect tractor.

1. Attach chain, cable or lifting strap to the two Overseeder sling brackets. Use an overhead hoist for rotor removal and installation.
2. Remove chain guard from right hand side of your Overseeder.
3. Remove drive chain as follows:

   Overseeders With Gauge Wheel Drive
   Refer to Figure 4-2:
   a. Remove chain from gauge wheel sprocket (#6) to seed cup sprocket (#7).
   b. Remove 5/8" x 2 1/2" long bolt (#1) and nut (#2).

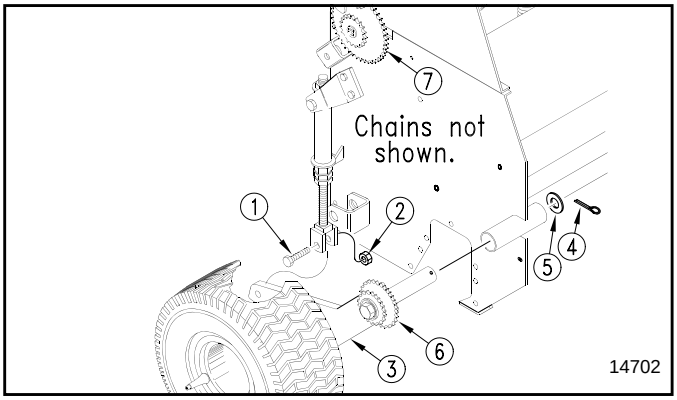

Gauge Wheel Disconnect
Figure 4-2

Overseeders With Rear Roller Drive
Refer to Figure 4-3:

a. Remove rear roller drive chain from speed change sprocket to rear roller sprocket.

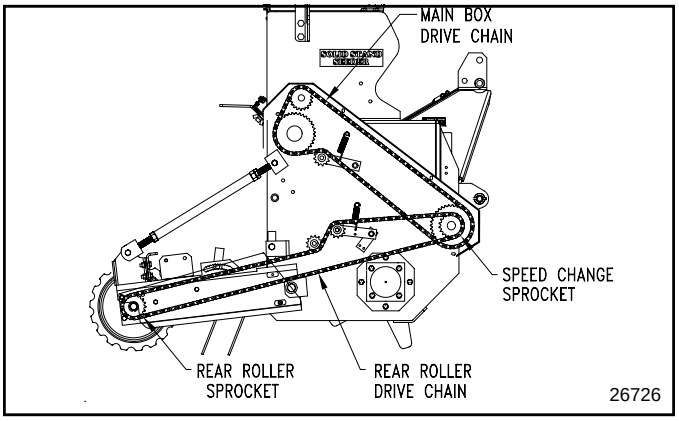

Rear Roller Drive Disconnect
Figure 4-3

Refer to Figure 4-4:

4. Remove right hand side or rotor from Overseeder by removing 1/2" x 1 1/4" bolts (#2), lock washer (#3), hex nut (#4) and then right hand bearing mount plate (#1) from Overseeder main frame.

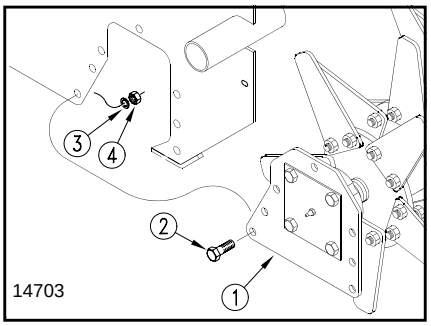

Right Hand Rotor Disassembly
Figure 4-4

Refer to Figure 4-5:

5. Disconnect left hand side of rotor from rotor drive hub (#1) by removing 7/16" x 1" long bolts (#3) and 7/16" lock washers (#2).

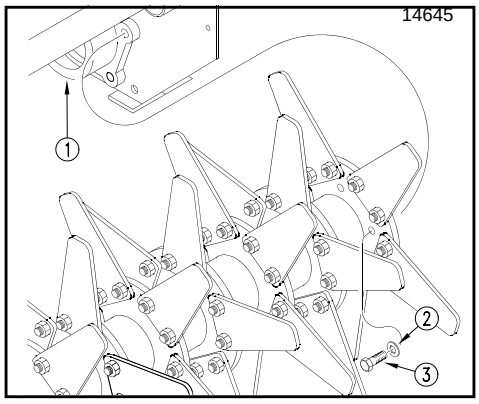

Left Hand Rotor Disassembly
Figure 4-5

Refer to Figure 4-6:

6. Remove bearing mount plate (#1) from bearing housing assembly (#4). Take care not to damage the gaskets (#2) on either side of the right hand bearing mount plate.
7. Remove snap ring (#3) and bearing (#4) from the rotor shaft.
8. Loosen two set screws (#5) in seal guard hub (#6) and slide hub off the rotor shaft.
9. Clamp rotor shaft on one of the knife mounting flanges and, using a spanner wrench, unscrew (left-hand threads) non-drive rotor flange (#7).

NOTE: The threads on the non-drive rotor flange are left-handed threads.

10. Slide knife mounting flanges (#8) and spacers (#9) off rotor shaft.
11. Replace knives (#12) as needed using new 7/16" lock nuts, Land Pride part no. 803-108C. Torque nuts to 68 ft-lbs.

NOTE: The spiral arrangement of the knives needs to be reassembled in the same manner.

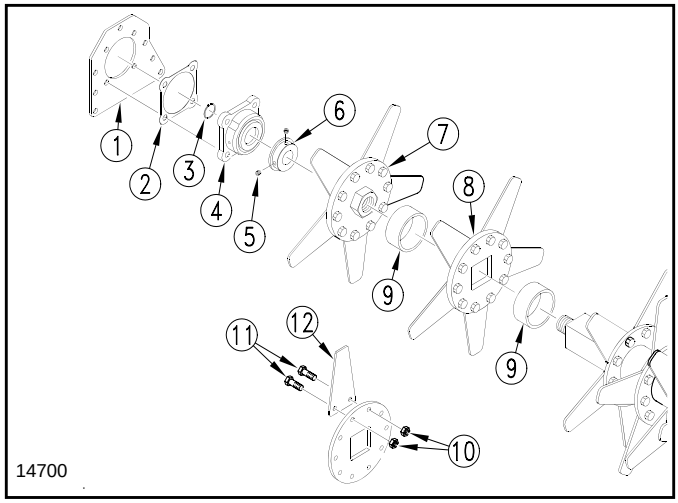

Rotor Bearing and Knife Removal
Figure 4-6

12. Inspect bearing and seal for wear and replace if necessary.
13. Reassemble spacers and knife mounting flanges in the same spiral pattern as they were before disassembly.

NOTE: The knives should all be on the right side of the mounting flanges as viewed from the rear of the Overseeder.

14. Reassemble non-drive rotor flange (#7). Using a spanner wrench, torque to 985 ft-lbs. Remember: These are left-handed threads.
15. Slide seal guard hub onto the rotor shaft and leave set screws loose.

16. Apply a coat of grease to the seal and press bearing housing assembly onto the rotor shaft, taking care not to damage the seal. Reinstall snap ring.
17. Install rotor to the Overseeder by reversing steps 2 through 4.

Rear Roller Maintenance

Refer to Figure 4-7:

Rear roller wheels (#14) should rotate freely over wheel mounting tube (#15) and have a small amount of lateral movement between the two end plates (#12). This loose fit allows for the rollers to turn independently from each other which keeps debri from locking them up and allows the seeder to turn corners without pushing dirt in front of the rollers.

Rear Roller Inspection

Inspect roller wheels daily to make sure they are turning and not pushing dirt. Your should be able to hold one roller still while rotating the roller next to it with your hand. If this cannot be done, then the rollers should be cleaned of debri that has impacted between them.

Over time, the roller wheels will wear against each other and become loose moving back and forth laterally on the mounting tube. Spacers, 1/4" in width, should be added on the left end to take up excessive slack and to extend the life of the roller wheels and mounting tube. Also, the roller wheels should be inspected for breakage. Broken rollers should be replaced as soon as possible.

Inspect roller wheels for wear by sliding all rear roller wheels (#14) and end spacers (#13) to the right and then measure the gap on the left end. If gap between last end spacer (#13) and end cap (#12) is 3/8" or greater, then an additional 1/4" spacer or spacers should be added to the mounting tube. Never add too many spacers. Too many spacers will force the roller wheels tight against one another and won't allow them to turn independently.

Rear Roller Disassembly

Disassemble rear roller mounting tube from Overseeder as follows:

> **NOTE:** During disassembly, set aside all loose components and hardware in an orderly fashion and in a safe location for relocating and reassembling.

1. Lower Overseeder and rear roller to ground, shut tractor off, set park brakes and remove switch key.
2. Disconnect packer chain (#6) or turnbuckle (#7) from the left hand rear roller arm (#16).
3. Remove 3/8" bolts (#4) and scraper bar (#5) from left and right rear roller arms (#16).
4. Remove 3/16" cotter pin (#8) and clevis pin (#9). Lower front of left rear roller arm (#16) to the ground.
5. Loosen set screw in eccentric locking collar of bearing (#10) and then rotate eccentric locking collar counterclockwise. This should free the shaft from the bearing.
6. Remove rear roller arm (#16) with attached bearing (#10) from rear roller mounting tube (#15).
7. Remove flat washer (#11) and end cap (#12).

Rear Roller Assembly

1. Replace roller wheels (#14) and/or add 1/4" spacer rings (#13) as needed on the left side of the seeder:

   Roller Wheels

   a. Remove roller wheels (#14) from mounting tube (#15) until you reach the broken roller.

   b. Replace broken roller with new roller and reinstall removed roller wheels.

   Spacer Rings

   a. Add spacer rings on the end of the mounting tube until gap measured in paragraph of "Rear Roller Inspection" is almost but not quite filled.
2. Replace end cap (#12) and flat washer (#11) on shaft of mounting tube (#15).
3. Insert shaft of mounting tube (#15) fully into bearing (#10). Turn bearing eccentric locking collar clockwise and then tighten set screw in locking collar.
4. Reattach rear roller arm (#16) to seeder panel with 1" clevis pin (#9) and 3/16" cotter pin (#8). Be sure to bend one leg of cotter pin to secure it in place.
5. Insert stop pin (#7) in seeder bracket and secure with hairpin cotter (#6).
6. Reattach scrapper bar (#5) to left and right rear roller arms (#16) with 3/8"-16 x 1 1/4 GR5 hex head cap screws (#4), flat washers (#3), lock washers (#2) and hex nuts (#1).
7. Reattach packer chain (#6) or turnbuckle (#7) to rear roller arm (#16) with remaining hardware.

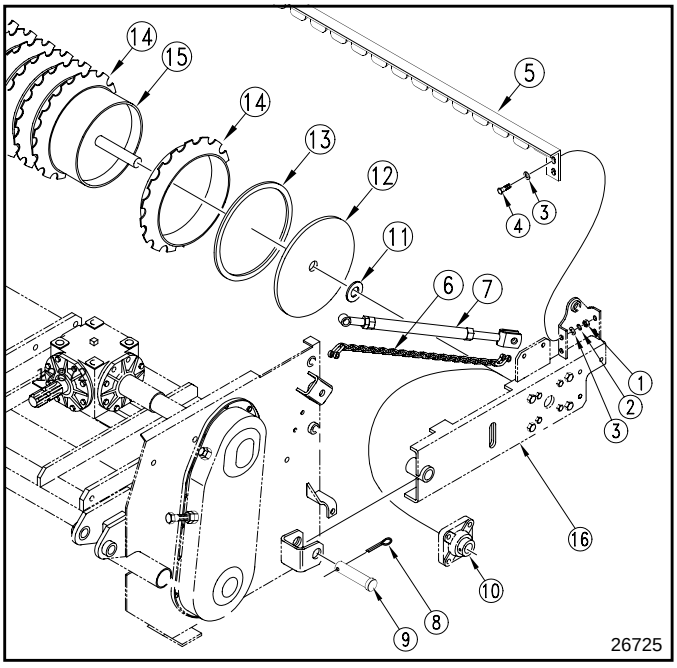

Rear Roller & Spacer Assembly (Left Side)
Figure 4-7

Driveline Slip Clutches

CAUTION

Engage parking brake, disengage PTO, shut off tractor, and remove key before working on or around the driveline and/or slip clutch.

CAUTION

Slip clutches that have been in use or have been slipped for only two or three seconds during run-in may be too hot to touch. Allow a hot clutch to cool before working on it.

Drive components are protected from shock loads with a friction slip clutch. The clutch must be capable of slippage during operation to protect the gearbox, driveline and other drive train parts.

Friction clutches should be “run-in” prior to initial operation and after long periods of inactivity to remove any oxidation that may have accumulated on the friction surfaces. Repeat “run-in” instructions at the beginning of each season and when moisture and/or condensation seizes the inner friction plates.

Refer to Figure 4-8 to determine which friction clutch your seeder has. Follow “run-in” instructions on the following pages for your specific clutch type.

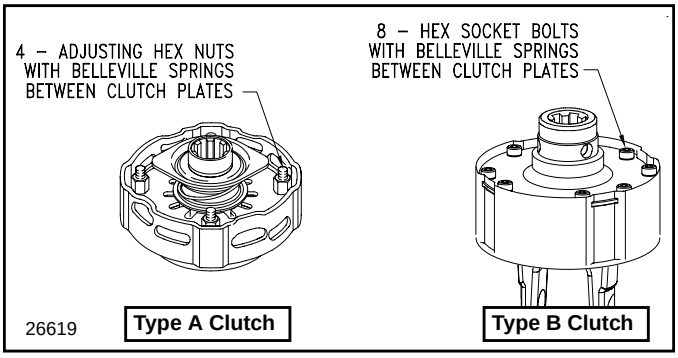

Clutch Types
Figure 4-8

Type A Clutches

Clutch Run-In

Refer to Figure 4-9 (View - A):

1. Using a pencil or other marker, scribe a line across the exposed edges of the clutch plates and friction disks.
2. Tighten all 4 nuts uniformly until spring load is low enough that the clutch slips freely with PTO engaged.

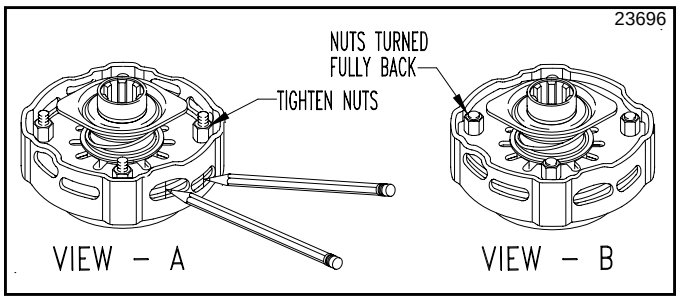

Type C Clutch Run-In
Figure 4-9

3. Make sure the area is clear of all bystanders and machine is safe to operate.
4. Start tractor and engage PTO for 2-3 seconds to permit slippage of clutch surfaces. Disengage PTO, then re-engage a second time for 2-3 seconds. Disengage PTO, shut off tractor and remove key. Wait for all components to stop before dismounting from tractor.
5. Inspect clutch and ensure that the scribed markings made on the clutch plates have changed position. Slippage has not occurred if any two marks on the friction disk and plate are still aligned. A clutch that has not slipped must be disassembled to separate the friction disk plates. See “Clutch Disassembly, Inspection & Assembly” below.

Refer to Figure 4-9 (View - B):

6. If no two marks on the friction disk and plate are still aligned, Turn all 4 nuts fully back.
7. Allow clutch to cool to ambient temperature before operating again. Clutch is now ready for use.
8. The clutch should be checked during the first hour of cutting and periodically each week. An additional set of scribe marks can be added to check for slippage.

Clutch Disassembly, Inspection & Assembly

If clutch run-in procedure above indicates that one or more of the friction disks did not slip, then the clutch must be disassembled into separate friction disks.

IMPORTANT: Before proceeding, secure clutch firmly in a vise or other clamping device to prevent injury.

OS1548 2-Plate Disassembly

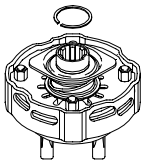

◀ Step 1

Remove snap ring.

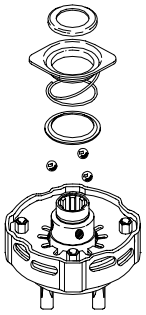

◀ Step 2

Remove backup ring, lock collar, compression spring, bottom backup ring, and balls.

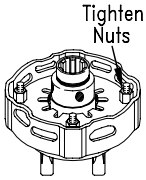

◀ Step 3

Tighten the four hex nuts uniformly until the clutch pack and hub are loose.

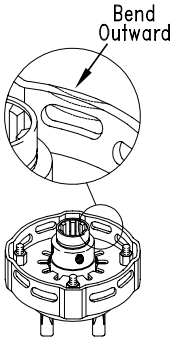

◀ Step 4

Bend all four retaining lugs out on edge of clutch housing.

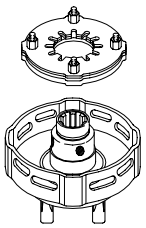

◀ Step 5

Remove thrust plate with Belleville Springs and lug rings to access friction discs and hub for inspection or service.

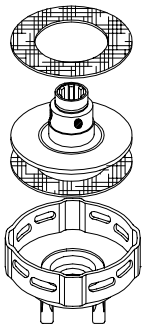

◀ Step 6

Inspect friction discs and hub.

10435

OS1548 2-Plate Assembly

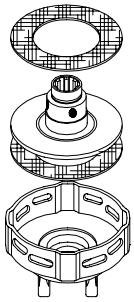

◀ Step 1

Place hub and friction discs into the housing.

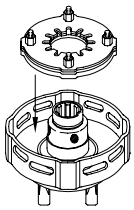

◀ Step 2

Compress Belleville Springs to the pressure plate by tightening the four hex nuts and then placing the assembly into the clutch housing.

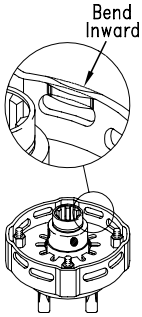

◀ Step 3

Bend retaining lugs inward over the Belleville Spring edges to secure the spring before backing the four hex nuts off.

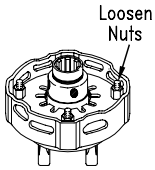

◀ Step 4

With lugs bent in, loosen the four hex nuts completely to the end of the threaded studs.

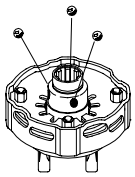

◀ Step 5

Insert greased balls.

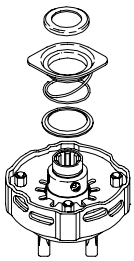

◀ Step 6

Install bottom backup ring, compression spring, lock collar, and top backup ring.

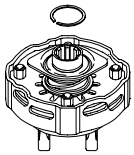

◀ Step 7

Install snap ring.

10449

OS1572 4-Plate Disassembly

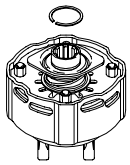

◀ Step 1
Remove snap ring.

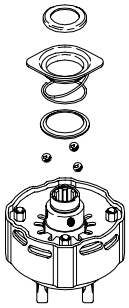

◀ Step 2
Remove backup ring, lock collar, compression spring, bottom backup ring, and balls.

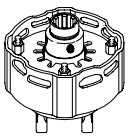

◀ Step 3
Tighten the four hex nuts uniformly until the clutch pack and hub are loose.

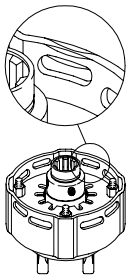

◀ Step 4
Bend all four retaining lugs out on the edge of the clutch housing.

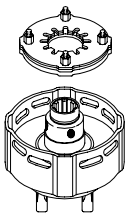

◀ Step 5
Remove the thrust plate with the Belleville Springs and lug rings to access friction disks and hub for inspection or service.

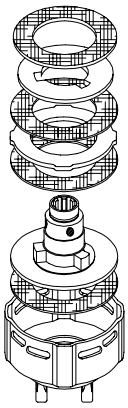

◀ Step 6
Inspect friction disks and hub.

14232

OS1572 4-Plate Assembly

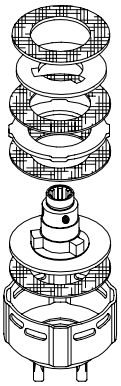

◀ Step 1
Place the hub and friction disks into the housing.

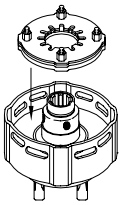

◀ Step 2
Compress the Belleville Springs to the pressure plate by tightening the four hex nuts and then placing the assembly into the clutch housing.

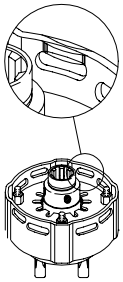

◀ Step 3
Bend the retaining lugs inward over the Belleville Spring edges to secure the spring before backing the four hex nuts off.

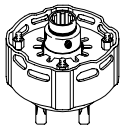

◀ Step 4
With the lugs bent in, loosen the four hex nuts completely to the end of the threaded studs.

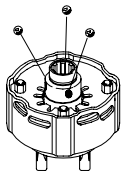

◀ Step 5
Insert greased balls.

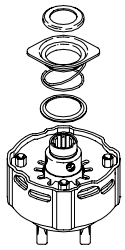

◀ Step 6
Install bottom backup ring, compression spring, lock collar, and top backup ring.

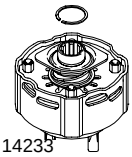

◀ Step 7
Install snap ring.

14233

Type B Clutch

Clutch Run-In

Refer to Figure 4-10:

1. Loosen counterclockwise all 8 hex head socket bolts uniformly 6 full turns.
2. Cycle clutch on and off 5 or 6 times (15 seconds on and 15 seconds off) with the engine operating at half throttle. Disengage driveline, shut off tractor and remove key. Wait for all components to stop before dismounting from tractor.
3. Tighten hex head socket bolts fully back. Clutch is ready for use
4. The clutch should be checked during the first hour of cutting and periodically each week.

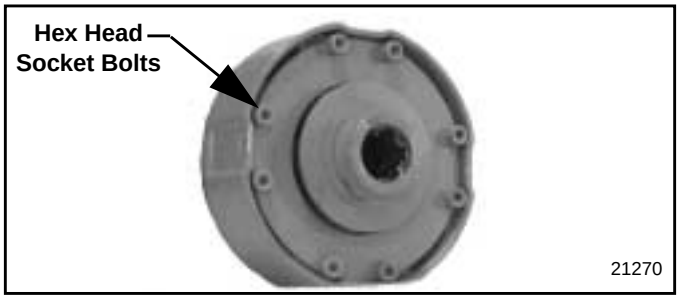

Type B Clutch Run-In
Figure 4-10

Disassembly and Assembly

Refer to Figure 4-11:

If the clutch run-in procedure indicated that one or more of the friction disks did not slip, then the clutch must be disassembled to separate the friction disks.

1. Rotate 8 hex head socket bolts (#2) all the way out to free stop flange (#3).
2. Rotate stop flange (#3) and remove from housing (#11)
3. Remove the following inner components:
   a. Spring kit (#4)
   b. Pressure flange (#5)
   c. 1st Friction Disc (#6)
   d. Hub with flange and pull collar (#7 & #1)
   e. 2nd Friction disc (#6)
   f. Intermediate flange (#8)
   g. 3rd Friction disc (#6)
   h. Hub disc (#9)
   i. 4th Friction disc (#6)
   j. Bearing (#10)
4. Inspect all components and replace to their original position. Make certain stop flange (#3) is replaced with its flanges down as shown.
5. Fully tighten all 8 hex head socket bolts (#2).

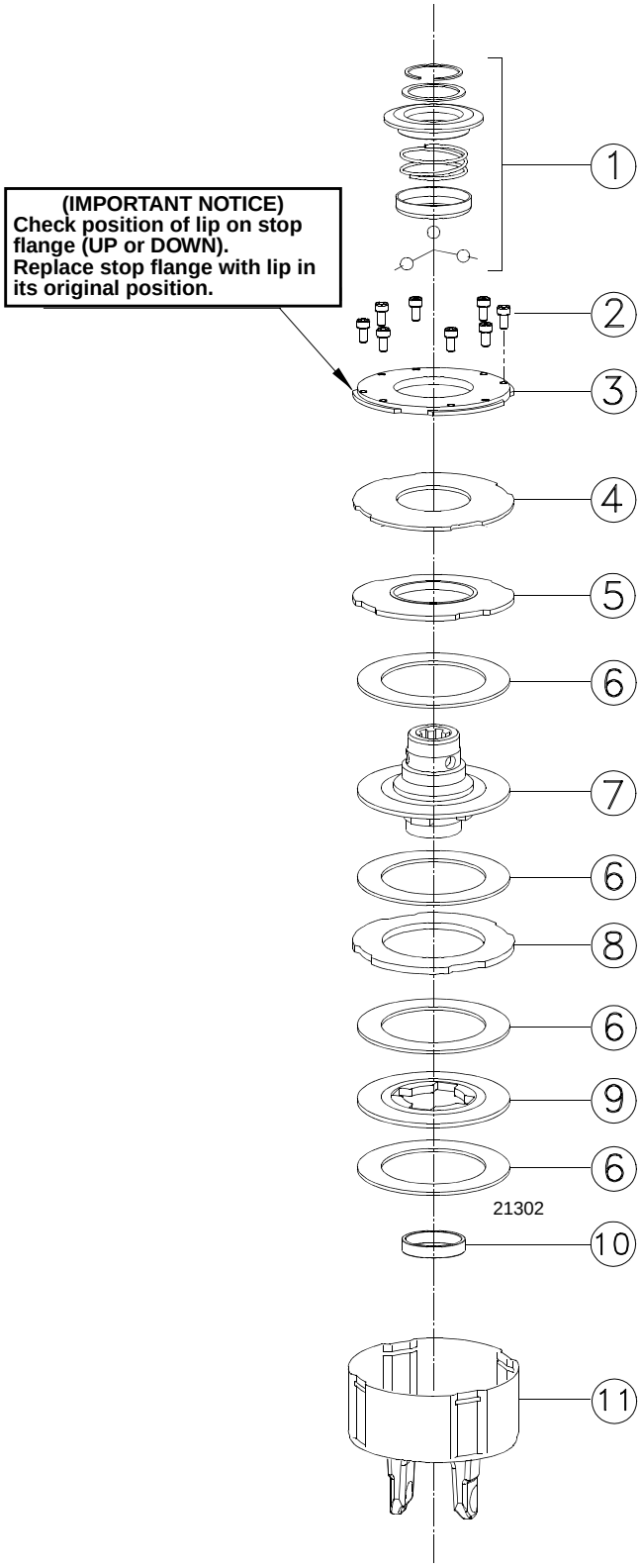

Type B Clutch Assembly
Figure 4-11

Lubrication Points

Lubrication Legend	Multi-purpose spray lube	Multi-purpose grease lube	Multi-purpose oil lube	50 Intervals in hours at which lubrication is required

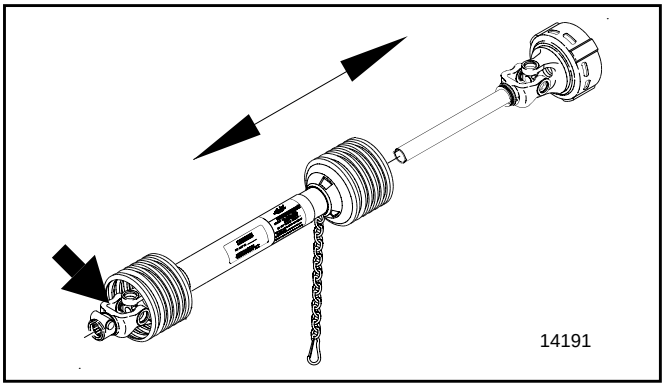

10 Hours

PTO - U-Joint

Type of grease: Multi-Purpose

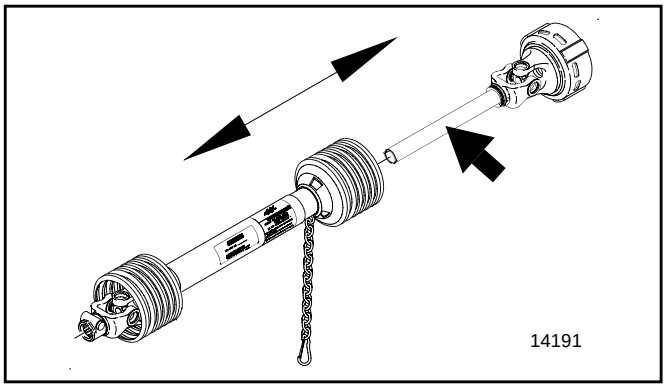

20 Hours

PTO - Profiles

Type of grease: Multi-Purpose

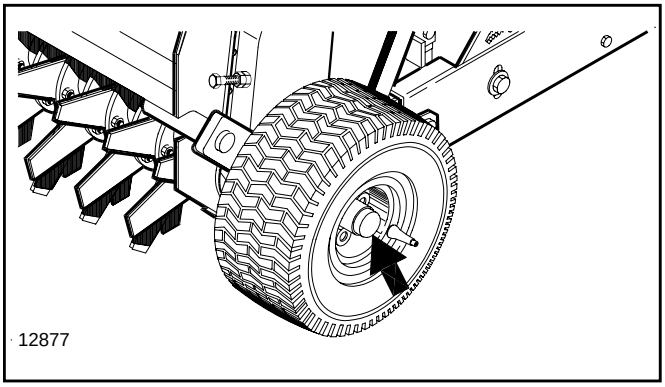

Seasonally

Wheel Bearings

Repack wheel bearings

Type of grease: Wheel Bearing Grease

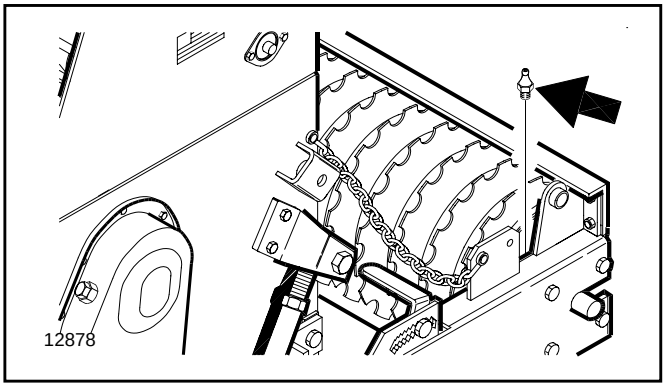

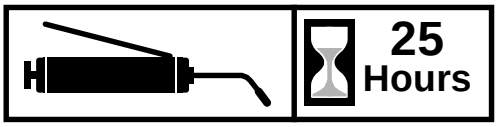

Rear Roller Bearings

Type of grease: Multi-Purpose

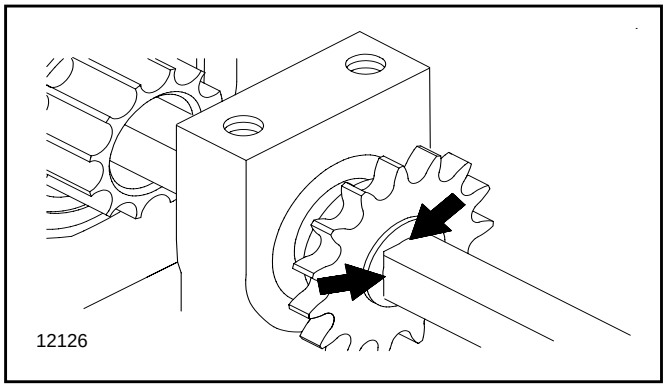

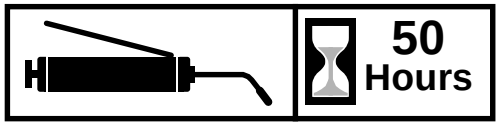

Feed Cup Drive Sprocket

Type of grease: Oil

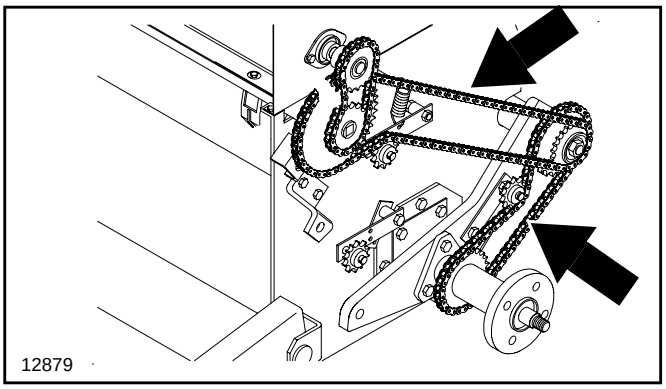

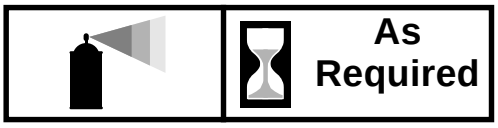

Feed Cup Drive Chains

Type: Chain Lubricant

Do not overlubricate

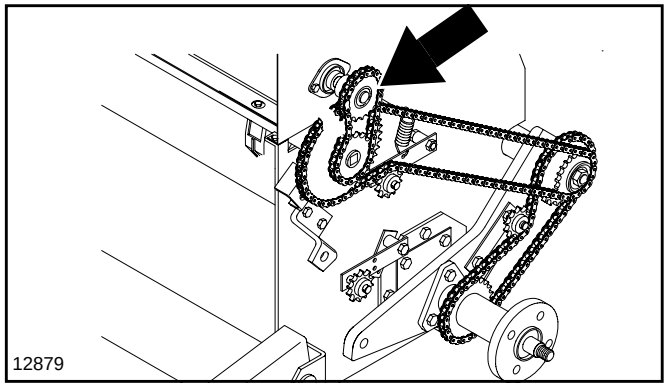

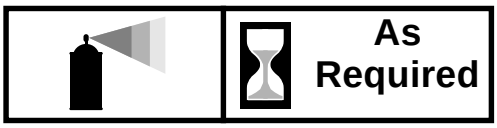

Agitator Drive Chain

(Small Seeds Attachment - 3 chains)

Type: Chain Lubricant

Do not overlubricate

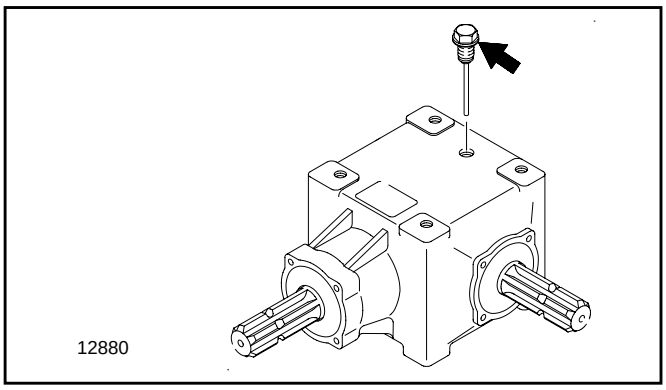

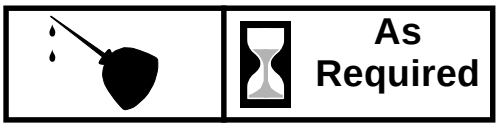

Gearbox

Type: Gear Lube 80-90 EP

Fill to full mark on dip stick

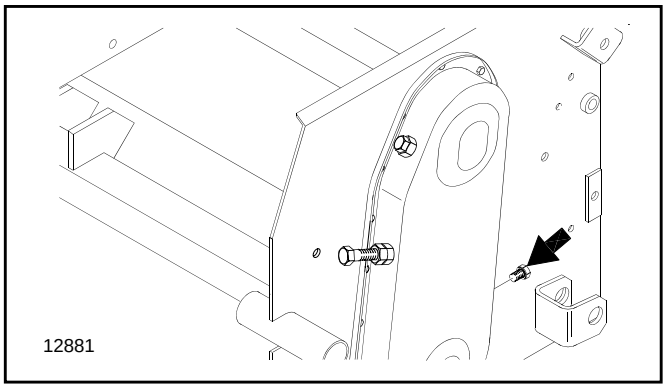

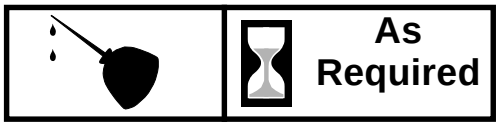

Driveline Chaincase

Oil should reach the hole of the cap. Overseeder should be level when checking.

Type: Shell Alvania EP00

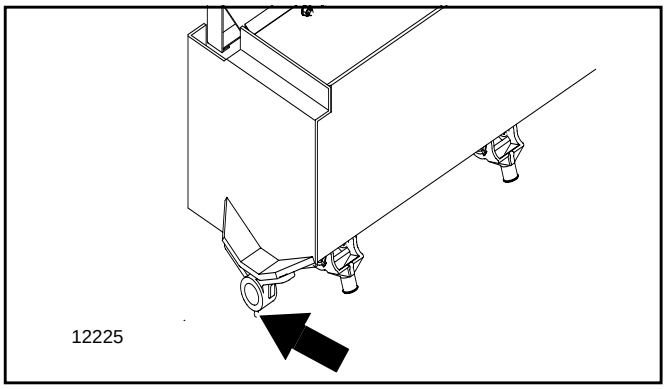

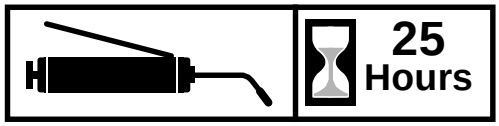

Drive Sprocket Hanger Bearing

(Small Seeds Attachment)

Type: Grease

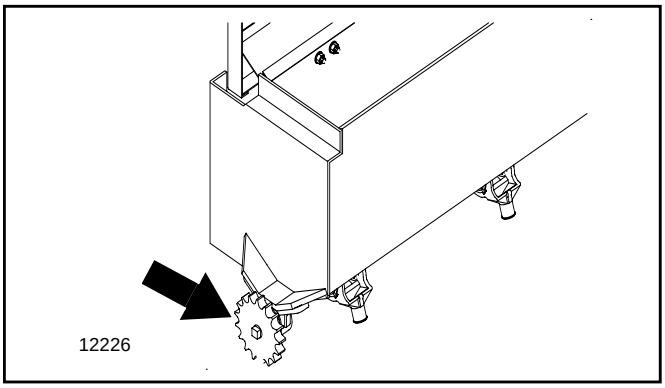

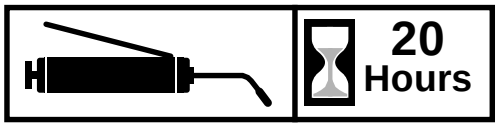

Feed Cup Drive Sprocket

(Small Seeds Attachment)

Type: Oil

Slit Seeder Attachment

Refer to Figure 5-1:

The slit seeder attachment provides for improved seed burial by diverting seed directly to the slits cut by the Overseeder knives.

The Slit Seeder option may be ordered with your Overseeder, or installed at a later time by you or your dealer. Use the following list to obtain the correct Slit Seeder Attachment for your Overseeder.

308-152A	OS1572 - 2” Slit Seeder Spacing
308-155A	OS1572 - 3” Slit Seeder Spacing
308-160A	OS1548 - 2” Slit Seeder Spacing
308-163A	OS1548 - 3” Slit Seeder Spacing

For additional information refer to:

- “Section 3 Adjustments”, on Page 27.

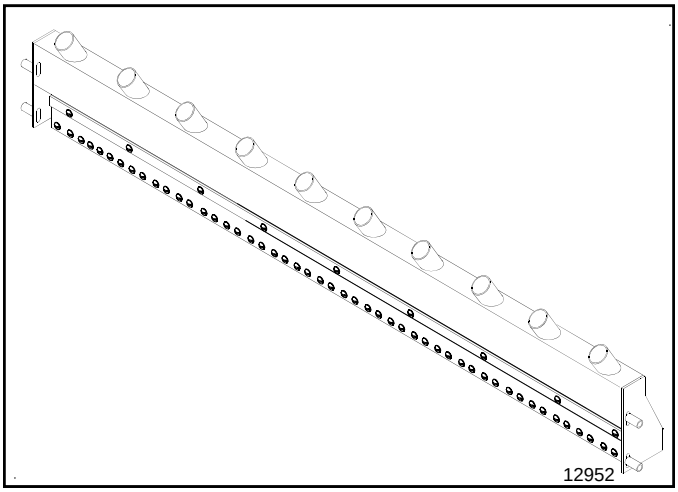

Slit Seeder Attachment
Figure 5-1

Rear Tine Attachment

Refer to Figure 5-2:

The rear tine attachment bolts to the rear arms with only two bolts. It is a full width two-row spring tooth harrow designed to help move seed into the soil. The tine attachment can be set at different angles and depths.

The Rear Tine option may be ordered with your Overseeder or installed at a later time by you or your dealer.

308-316A	48” Overseeder
308-317A	72” Overseeder

For additional information refer to:

- “Tine Attachment (Optional)” on page 26.

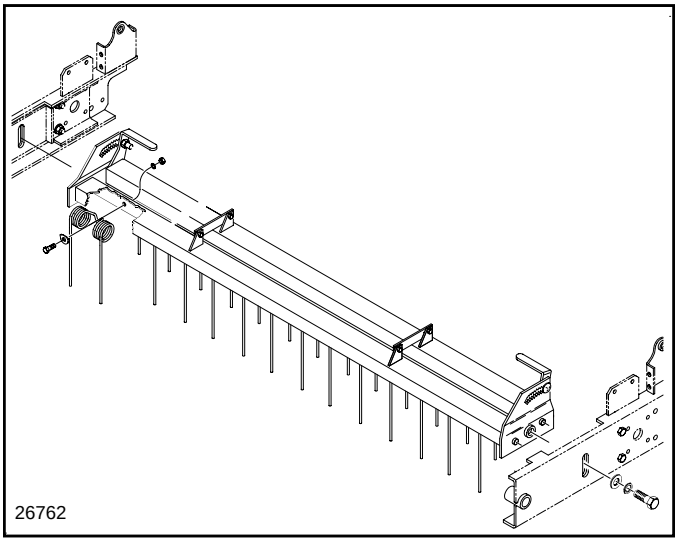

Rear Tine Attachment
Figure 5-2

Front Roller Attachment

Refer to Figure 5-3:

The front roller attachment is a full width anti-scalping roller with a floating top link giving your Overseeder better ground following capability. The front roller can set the cutting depth of the knives when used in conjunction with a rear roller drive seeder.

The Front Roller option may be ordered with your Overseeder, or installed later by you or your dealer.

308-258A	48” Overseeder
308-259A	72” Overseeder

For additional information refer to:

- **“Section 3 Adjustments”**, on Page 25.

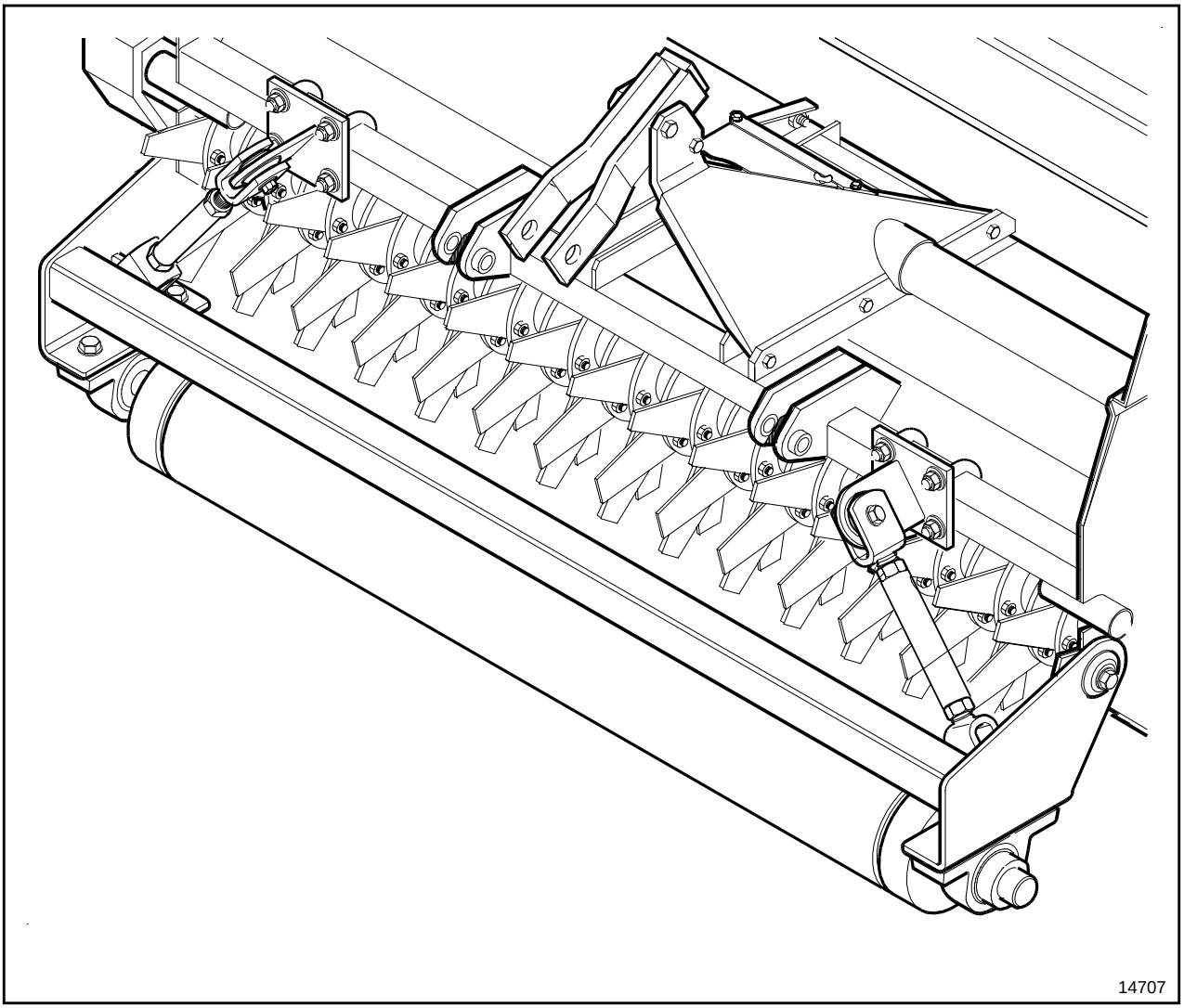

Front Roller Attachment
Figure 5-3

Small Seeds Attachment

Refer to Figure 5-4:

The Land Pride Small Seeds Attachment is an option made available to fit any Land Pride 48” or 72” Overseeder.

The small seeds attachment is designed to meter various small seeds. It features a 0.23 bushel/foot profile which gives the OS1548 Small Seeds Attachment a 0.95 bushel capacity and the OS1572 Small Seeds Attachment a 1.36 bushel capacity.

The Small Seeds option may be ordered with your Overseeder, or installed at a later time by you or your dealer. Use the following list to obtain the correct Small Seeds Attachment for your Overseeder.

Land Pride Part No.	Overseeder Size	Overseeder Drive System
308-233A	48”	Gauge Wheel Drive
308-234A	48”	Rear Roller Drive
308-235A	72”	Gauge Wheel Drive
308-236A	72”	Rear Roller Drive

For additional information refer to:

- **“Section 3 Adjustments”**, on Page 18.
- **“Section 4 Lubrication”**, on Page 38.
- **“Section 8 Troubleshooting”**, on Page 47.

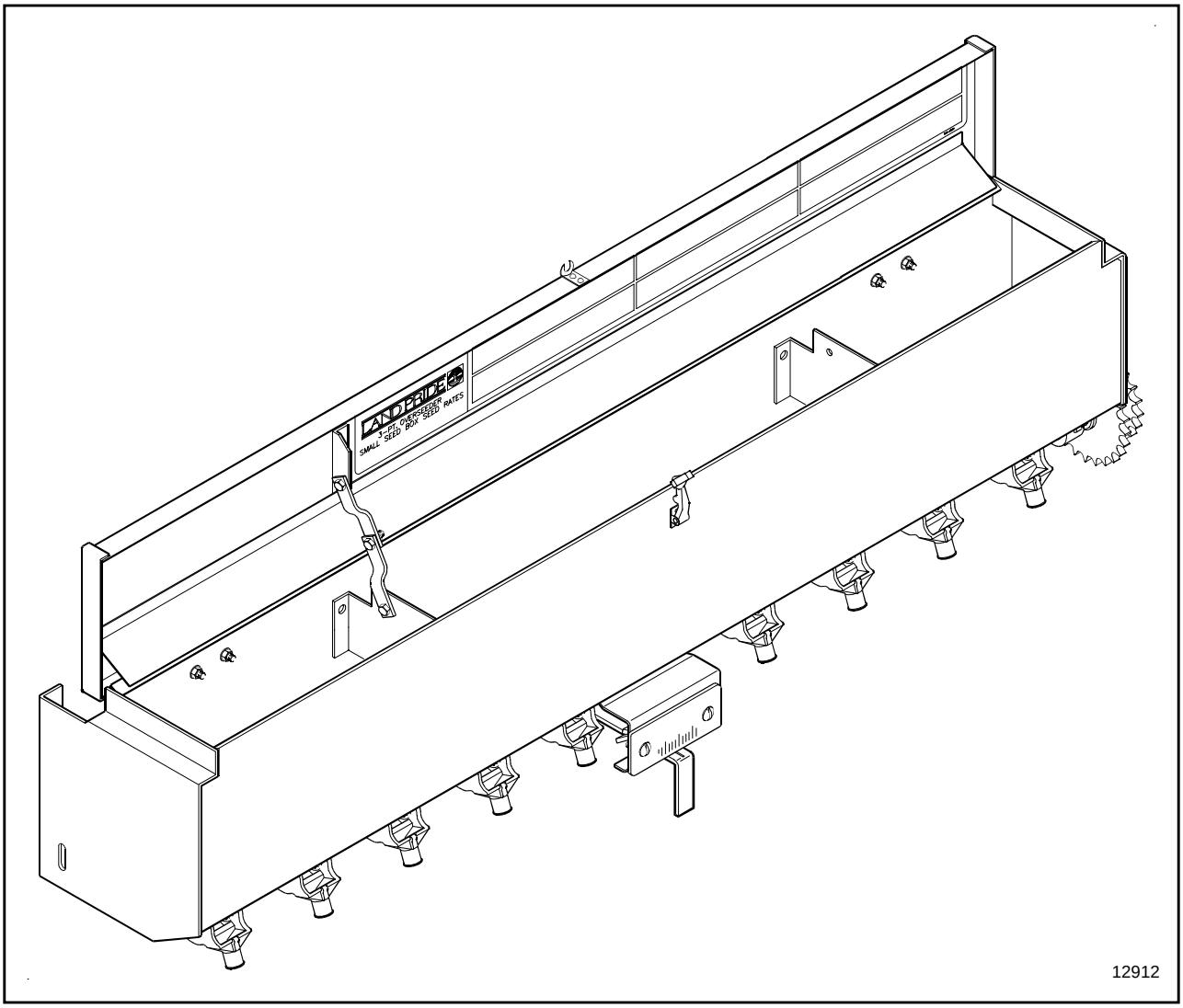

Small Seeds Attachment
Figure 5-4

OS1548 & OS1572 Series

	OS1548	OS1572
Overall Width	Gauge wheel drive: 77 3/4” Rear roller drive: 60 1/8"	Gauge wheel drive: 99” Rear roller drive: 81 1/4"
Seeding Width	51”	72”
Box Length	48”	72”
Empty Weight	2" Spacing, Wheel Drive: 1290 lbs. 2" Spacing, Roller Drive: 1250 lbs. 3" Spacing, Roller Drive: 1220 lbs.	2" Spacing, Wheel Drive: 1645 lbs. 2" Spacing, Roller Drive: 1605 lbs. 3" Spacing, Roller Drive: 1565 lbs.
Maximum Horse Power	60	
Driveline	540 rpm; Heavy duty construction with slip clutch protection and fully shielded	
Gearbox	540 rpm input; Constructed of cast iron housing w/steel gears.	
Gearbox Oil	Gear Lube 80-90 EP	
Roller Chain, (Knife Drive)	#80 Roller Chain; adjustable	#100 Roller Chain; adjustable
Chaincase, (Knife Drive)	Fully enclosed oil bath style chain box with drain plug and vent plug.	
Chaincase Oil	Shell Alvania EP00	
Rotor Diameter	18”	
Rotor Speed	400 RPM	
Knife Tip Speed	2000 FPM	
Knife Depth	0”-1 1/2”	
Knife Spacing	2" or 3"	
Number of Knives - 5 per flange	115 knives on 2” spacing 80 knives on 3” spacing	170 knives on 2” spacing 115 knives on 3” spacing
Knife Construction	Straight knives: 3/16" thick high carbon, heat treated steel. Curved knives: 5/32" thick high carbon, heat treated steel.	
Seed Box Construction	Water tight box with wind guarded seed splash lid.	
Seed Box Capacity	4 bushels with paddle agitator	6 Bushels with paddle agitator
Productive (3 1/2 mph)	1.5 acres/hr. (broadcast)	2 acres/hr. (broadcast)
Number of Seed Cups	7	10
Seed Cup Metering Construction	Powder metal flutes with individual clean-out handles.	
Seed Cup Drive	Gauge Wheel Drive: Right hand driven with adjustable spring loaded down float. Rear Roller Drive: Rear roller driven to eliminate gauge wheels.	
Seed Cup Agitation	Chain driven paddle type agitators above seed cups.	
Seed Settings	Wide range of calibration settings per acre and per 1000 sq. ft.	
Gauge Wheel Tires	18 x 8.50 x 8 turf tires at 20 psi	
Number of Packer Wheels	22	31
Packer Wheel Construction	Notched 12” dia. cast iron rollers with corrugated scraper.	
Hitch	Category I: with 10" offset	Category I: Centered
	Fits Land Pride Quick-Hitch.	
Optional Add-on Equipment		
Small Seeds Box	One-Half Bushel capacity (.64 bu) with: • Gauge Wheel drive Seed Cups • Rear Roller Drive Seed Cups	One Bushel capacity (.96 bu) with: • Gauge Wheel drive Seed Cups • Rear Roller Drive Seed Cups
Slit Seeder Attachment	2" or 3" Spacing; Directs seed into the slits cut by the knives.	
Tines	Double Torsion, height and angle adjustable; Individual replacement.	
Front Roller	Full width, anti-scalping, depth control, with floating top link.	

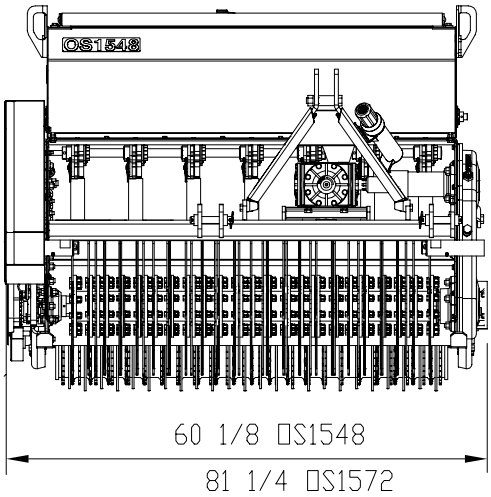
OS1548
60 1/8 □S1548
81 1/4 □S1572

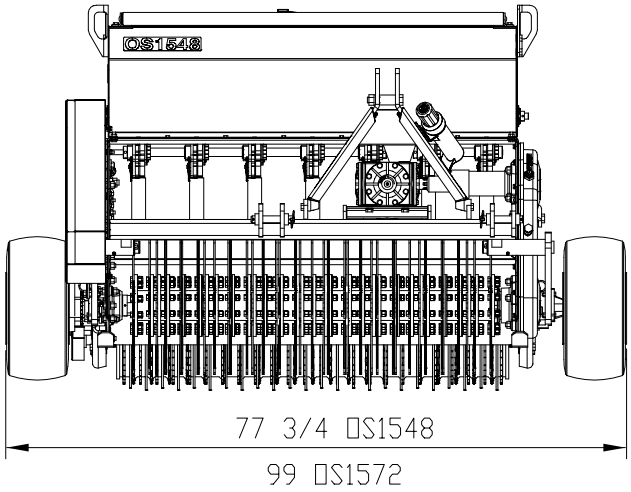
OS1548
77 3/4 □S1548
99 □S1572

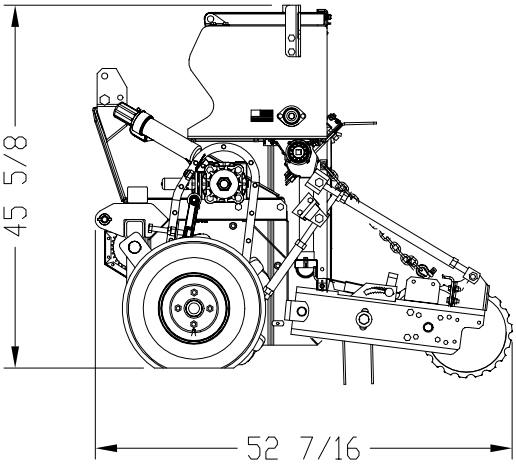
45 5/8
52 7/16

26728

OS15 Series Overseeders

Features	Benefits
2” or 3” Spacing	Knife spacing for different geographic soil types, conditions and moisture.
Design guarantees seed to soil contact	Knives create a slit, the seed is precisely placed in the slit and the roller incorporates seed to soil contact (for better seed germination).
Easy seed cup and seed box emptying	Flute is designed to allow easy clean out of material in seed box and seed flutes.
Seed box agitator	Eliminates seed bridging.
Seed cups with metal flutes	Superior metering accuracy by each flute. Powder metal dissipates heat to keep cups running cool.
Gauge wheel or rear roller seed cup drive	Gauge wheels keeps knives in ground more consistently in undulating terrain. Rear roller drive allows for closer seeding to obstructions.
Water tight seed box	Keeps water out and seeds in.
Wind guarded seed drop	Seed rate is consistent across width of the machine and is not hampered by windy conditions.
Straight Knives	More aggressive, picks up thatch.
Curved Knives	Less aggressive, does not disturb thatch layer.
Small seeds box	Simultaneously seeds second type of seed.
Slit seeder attachment	Guides seed directly into slit. Good for overseeding expensive grasses to insure good seed to soil contact.
Front roller (Option)	Used to set seeding depth with units equipped with rear roller drive. Precise depth control.
Working widths	48”, 72”
HP rating	25-60 HP
Offset hitch – 48” unit	Offset by 10” to cover right tire track.
Fits Land Pride Quick-Hitch	Aids in one person hook-up.
Machine weights	48” - 1260 lbs; 72” - 1605 lbs.
0”-1 1/2” Depth adjustment	Adjust depth for different seed types, soil conditions and moisture.
High carbon heat-treated knives	Last longer in sandy soils.
High tensile roller chain	Provides a smooth and quiet drive.
1 Bushel per foot seedbox	Fill less often with a large box.
Seed splash guard	Seedbox lid has a guard to prevent seed from being spilled between lid and box.
Heavy-duty lid	Lid won’t buckle or slam shut in high winds.
Lift hooks	Allow for easy loading & unloading from trailers
Packer wheel scraper	Prevents soil buildup on packer wheels in moist conditions.
Covered drive chains	Drive chains are covered for safety, as well as keeping tree branches away to eliminate chain jumping.
Warranty	5 Years on gearbox. One year parts & labor.

Troubleshooting Chart

Problem	Solution
Machine makes intermittent clicking noise	Tighten Knives
	Replace damaged gear in gearbox
	Replace damaged chain link
PTO vibrates	Replace worn universal joint
	Remove trash from rotor
	Lower machine and readjust tractor lift stop
Gearbox noise is noticeable and constant	Allow time for break-in
	Add oil
	Replace worn gears
Oil leaking from gearbox	Replace damaged seals or gaskets
	If overfilled, drain to proper level
Rotor will not turn	Engage PTO
	Repair broken drive chain
	Reduce load to Overseeder
Cutting depth insufficient	Lower tractor 3-point arms
	Increase tractor rpm
	Adjust gauge wheels
	Replace worn or bent knives
	Clear obstacles entangled in knives and/or rotor
Machine skips	Replace worn knives
	Reduce load
	Reduce ground speed
Knives balling up with soil	Replace worn or bent knives
	Decrease tractor speed
Overseeder bumping on the ground	Clear obstacles entangled in knives and/or rotor
Uneven seed spacing or uneven stand	Check tire pressure. Proper inflation is listed in the **"Tire Inflation Chart",** Section 9, Page 48
	Check for plugging in feed cups
	Check to see if seed tubes are plugged
	Reduce ground speed
	Check all drive chains, sprockets, keys and pins
Actual seeding rate is different than desired	Seed treatment will affect seeding rate if the chemicals build up in seed cup. Unless cleaned regularly, this build-up can cause breakage of the seed cup shaft.
	See **"Adjustments"**, Section 3, starting on Page 18, for instructions on calculating seed rate.

Torque Values Chart

Bolt Size (Inches)	Bolt Head Identification: Grade 2		Grade 5		Grade 8	
in-tpi [1]	N·m [2]	ft-lb [3]	N·m	ft-lb	N·m	ft-lb
1/4" - 20	7.4	5.6	11	8	16	12
1/4" - 28	8.5	6	13	10	18	14
5/16" - 18	15	11	24	17	33	25
5/16" - 24	17	13	26	19	37	27
3/8" - 16	27	20	42	31	59	44
3/8" - 24	31	22	47	35	67	49
7/16" - 14	43	32	67	49	95	70
7/16" - 20	49	36	75	55	105	78
1/2" - 13	66	49	105	76	145	105
1/2" - 20	75	55	115	85	165	120
9/16" - 12	95	70	150	110	210	155
9/16" - 18	105	79	165	120	235	170
5/8" - 11	130	97	205	150	285	210
5/8" - 18	150	110	230	170	325	240
3/4" - 10	235	170	360	265	510	375
3/4" - 16	260	190	405	295	570	420
7/8" - 9	225	165	585	430	820	605
7/8" - 14	250	185	640	475	905	670
1" - 8	340	250	875	645	1230	910
1" - 12	370	275	955	705	1350	995
1-1/8" - 7	480	355	1080	795	1750	1290
1 1/8" - 12	540	395	1210	890	1960	1440
1 1/4" - 7	680	500	1520	1120	2460	1820
1 1/4" - 12	750	555	1680	1240	2730	2010
1 3/8" - 6	890	655	1990	1470	3230	2380
1 3/8" - 12	1010	745	2270	1670	3680	2710
1 1/2" - 6	1180	870	2640	1950	4290	3160
1 1/2" - 12	1330	980	2970	2190	4820	3560

Bolt Size (Metric)	Bolt Head Identification: 5.8 Class 5.8		8.8 Class 8.8		10.9 Class 10.9	
mm x pitch	N·m	ft-lb	N·m	ft-lb	N·m	ft-lb
M 5 X 0.8	4	3	6	5	9	7
M 6 X 1	7	5	11	8	15	11
M 8 X 1.25	17	12	26	19	36	27
M 8 X 1	18	13	28	21	39	29
M10 X 1.5	33	24	52	39	72	53
M10 X 0.75	39	29	61	45	85	62
M12 X 1.75	58	42	91	67	125	93
M12 X 1.5	60	44	95	70	130	97
M12 X 1	90	66	105	77	145	105
M14 X 2	92	68	145	105	200	150
M14 X 1.5	99	73	155	115	l215	160
M16 X 2	145	105	225	165	315	230
M16 X 1.5	155	115	240	180	335	245
M18 X 2.5	195	145	310	230	405	300
M18 X 1.5	220	165	350	260	485	355
M20 X 2.5	280	205	440	325	610	450
M20 X 1.5	310	230	650	480	900	665
M24 X 3	480	355	760	560	1050	780
M24 X 2	525	390	830	610	1150	845
M30 X 3.5	960	705	1510	1120	2100	1550
M30 X 2	1060	785	1680	1240	2320	1710
M36 X 3.5	1730	1270	2650	1950	3660	2700
M36 X 2	1880	1380	2960	2190	4100	3220

[1] in-tpi = nominal thread diameter in inches-threads per inch

[2] N· m = newton-meters

[3] ft-lb= foot pounds

[4] mm x pitch = nominal thread diameter in millimeters x thread pitch

Torque tolerance + 0%, -15% of torquing values. Unless otherwise specified use torque values listed above.

Additional Torque Values

Non driven Rotor End Flange	985 ft-lbs.	Use a spanner wrench to loosen.
7/16" Knife Mounting Bolts & Lock Nuts	68 ft-lbs.	

Tire Inflation Chart

Tire Size	Inflation PSI
8 1/2" x 18"	20 psi

Warranty

Land Pride warrants to the original purchaser that this Land Pride product will be free from defects in material and workmanship beginning on the date of purchase by the end user according to the following schedule when used as intended and under normal service and conditions for personal use.

Overall Unit and Driveline: One year Parts and Labor

Gearbox: Five years Parts and Labor.

Knives and Packer Wheels: Considered wear items.

Slip-Clutch Friction Discs: Considered wear items.

This Warranty is limited to the replacement of any defective part by Land Pride and the installation by the dealer of any such replacement part, and does not cover common wear items such as knives, belts, tines, etc. Land Pride reserves the right to inspect any equipment or parts which are claimed to have been defective in material or workmanship.

This Warranty does not apply to any part or product which in Land Pride's judgment shall have been misused or damaged by accident or lack of normal maintenance or care, or which has been repaired or altered in a way which adversely affects its performance or reliability, or which has been used for a purpose for which the product is not designed. Misuse also specifically includes failure to properly maintain oil levels, grease points, and driveline shafts.

Claims under this Warranty must be made to the dealer which originally sold the product and all warranty adjustments must be made through such dealer. Land Pride reserves the right to make changes in materials or design of the product at any time without notice.

This Warranty shall not be interpreted to render Land Pride liable for damages of any kind, direct, consequential, or contingent to property. Furthermore, Land Pride shall not be liable for damages resulting from any cause beyond its reasonable control. This Warranty does not extend to loss of crops, any expense or loss for labor, supplies, rental machinery or for any other reason.

No other warranty of any kind whatsoever, express or implied, is made with respect to this sale; and all implied warranties of merchantability and fitness for a particular purpose which exceed the obligations set forth in this written warranty are hereby disclaimed and excluded from this sale.

This Warranty is not valid unless registered with Land Pride within 30 days from the date of purchase by the end user.

Corporate Office: P.O. Box 5060
Salina, Kansas 67402-5060 USA
www.landpride.com